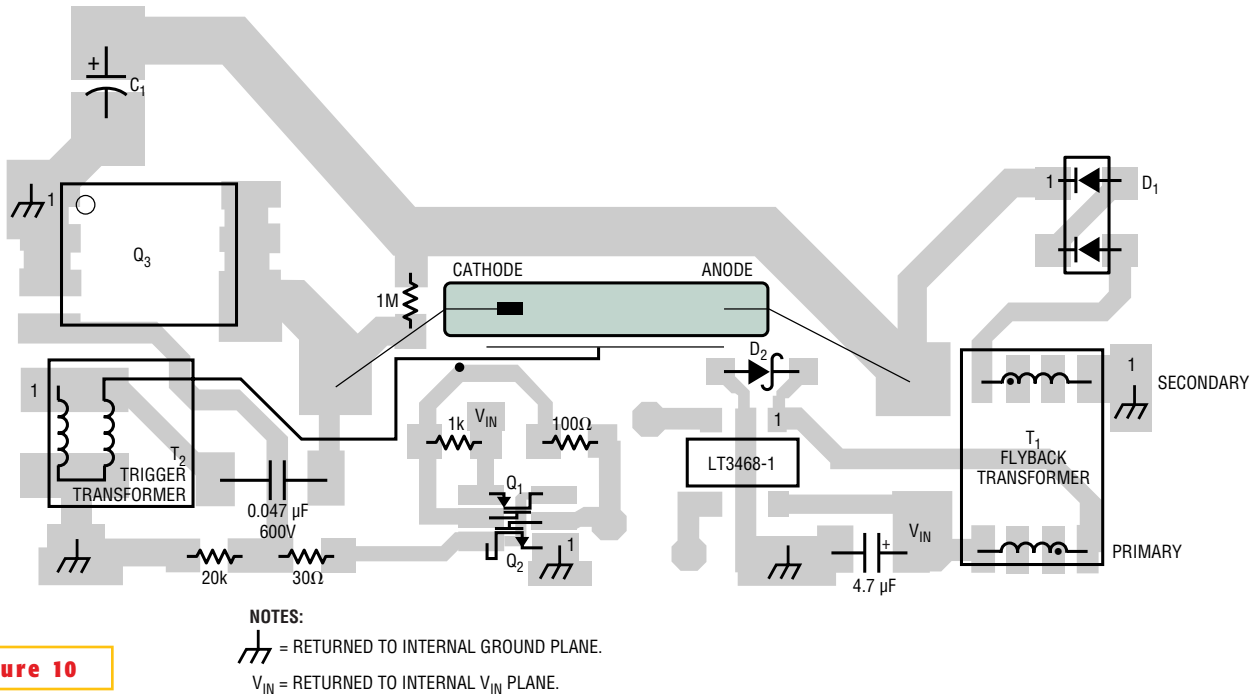

Figure 10

In this magnified demonstration layout for Figure 6, lamp connections are wires, not traces, and wide T_1 secondary spacing accommodates 300V output.