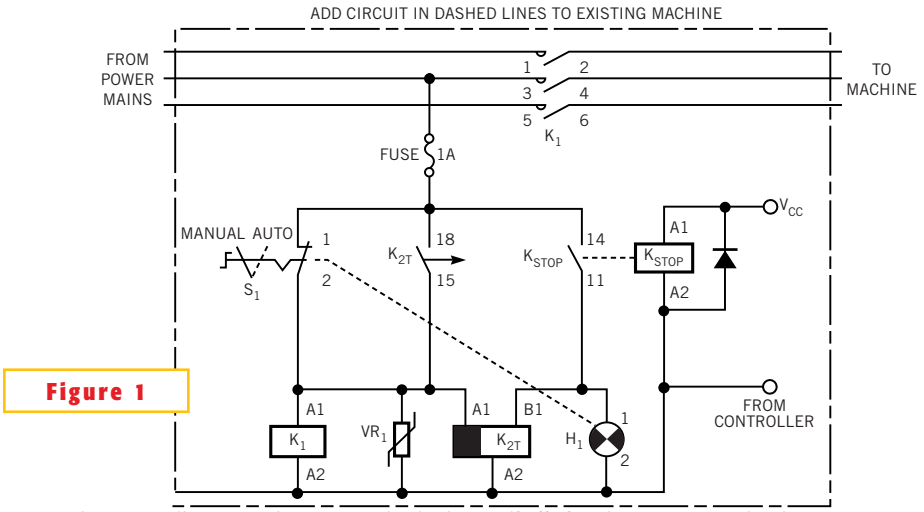


**Figure 1**

This circuit allows a machine to completely shut itself off after doing its assigned task.