Figure 1

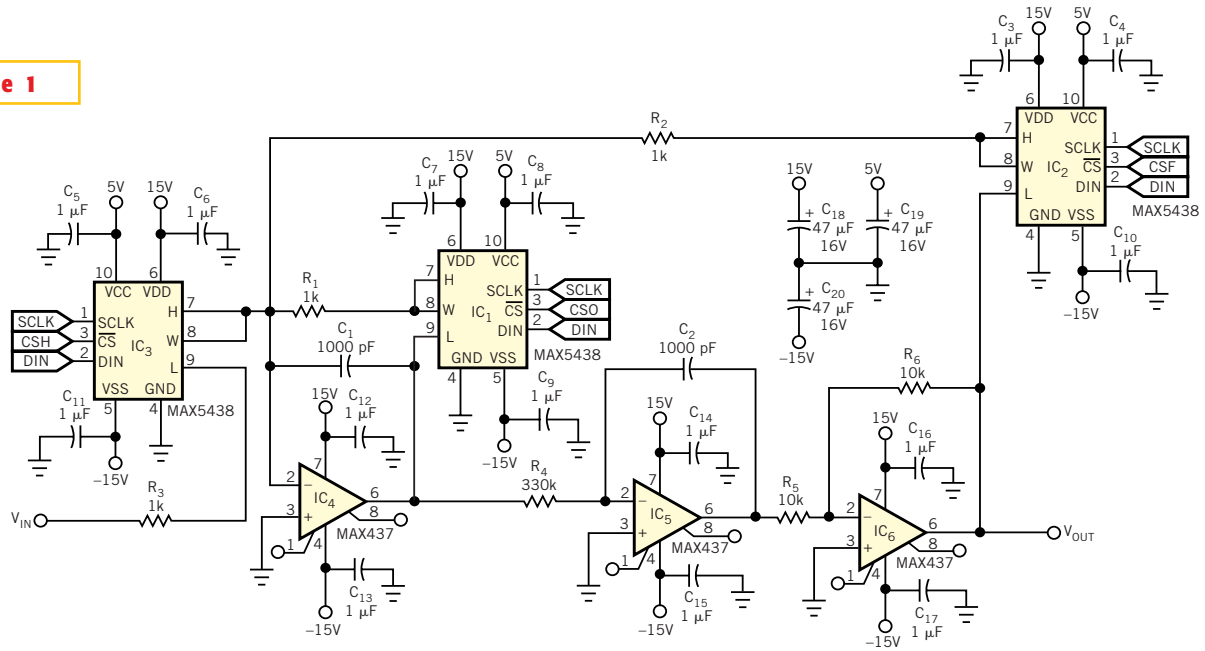

Digital potentiometers adjust the corner frequency, Q, and gain for this biquad analog filter.