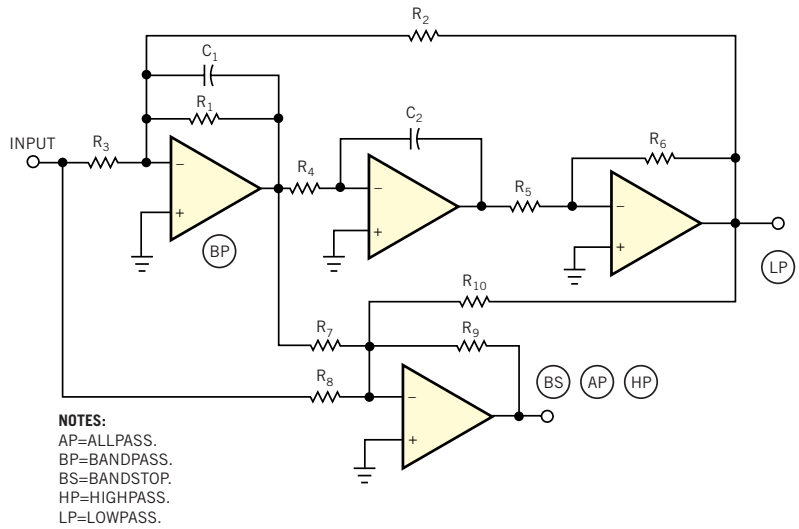

Figure 3 The standard biquad filter circuit produces lowpass and bandpass responses, and the addition of a fourth op amp produces a highpass response. Removing R_{10} and adjusting various component values produce a notch or bandstop response or an allpass response.