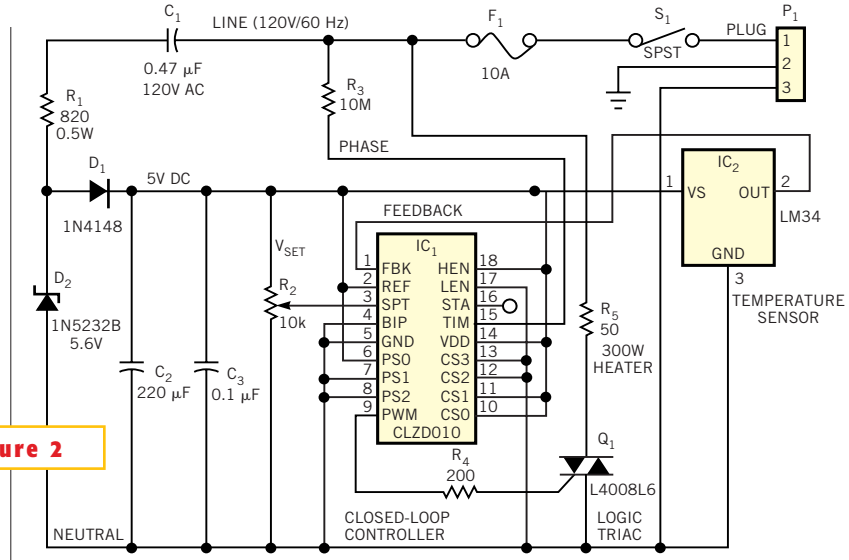

Figure 2

A slight modification adapts Figure 1's circuit to for heating control.