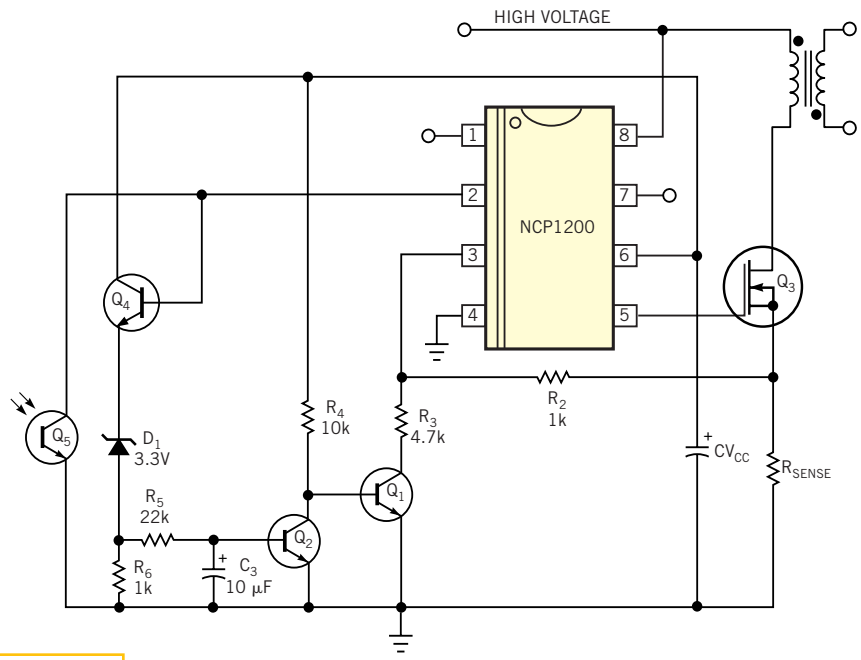

Figure 2 A transistor network increases the peak current for a moment until the power supply gives up by reducing the peak setpoint.