Figure 3

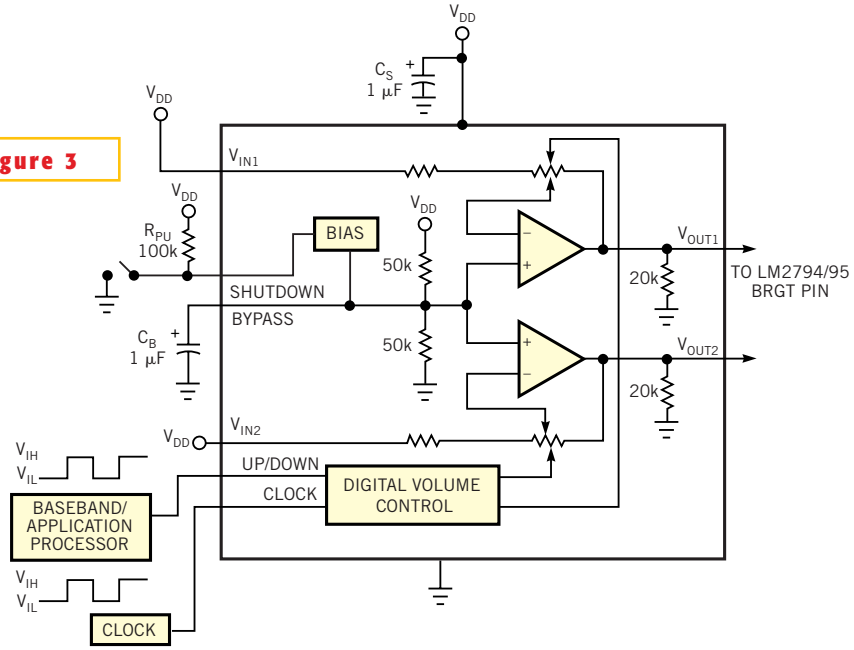

A headphone amplifier finds dual use in a white-LED dimming circuit.