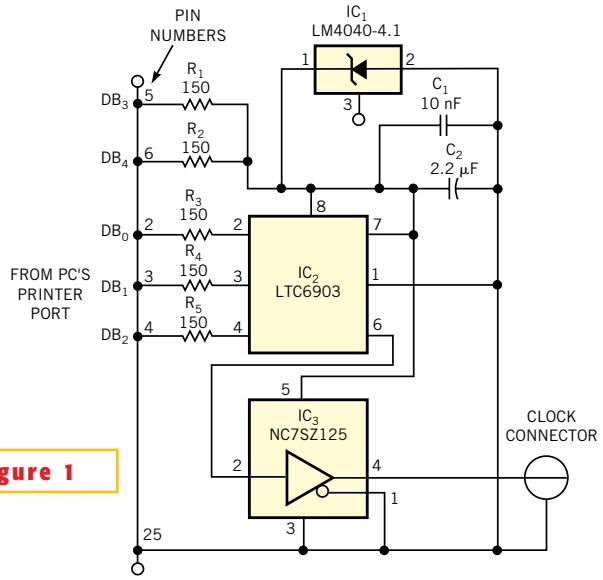

Figure 1

PC-programmable wide-range clock source features minimal component count.