 By Jeff Loyer, Intel Corp

AS BUS SPEEDS MOVE INTO THE MICROWAVE RANGE, DIGITAL DESIGNERS NEED THOROUGH KNOWLEDGE OF S-PARAMETERS.

S-parameters and digital-circuit design

IN THE DAYS of relatively slow 66-MHz buses, designers could ignore signal-integrity effects without problem, certainly for small boards. Similarly, they didn't have to know about S-parameters (scattering parameters), long used by microwave-spectrum engineers, as they designed for the less-than-1-GHz range. However, as bus speeds move into that microwave range, digital designers will have to become intimately familiar with S-parameters and how they apply to their interconnect designs.

START WITH S21, OR "INSERTION LOSS"

As an example of why S-parameters are critical, look at the characteristics of a simple 10-in. (254-mm), 50Ω trace on FR4 pc-board material. With the simple circuit of **Figure 1**, which represents a simplified block diagram of a two-port VNA (vector-network analyzer), designers can see the attenuation of signals going through the trace as a function of frequency. **Figure 2** shows the results of measuring an actual trace with a VNA and is a plot of the ratio V_{OUT}/V_{IN} (magnitude) of sine waves from 200 MHz to 5 GHz, where V_{IN} is the magnitude of the voltage applied to Port 1, and V_{OUT} is the magnitude of the voltage measured at Port 2. Note that the applied voltage is $V_{IN(REFERENCE)}$, which differs from the voltage measured at Port 1. This measure of merit is referred to as insertion loss, designated as S21 in S-parameter analysis.

In this case, the signal amplitude is attenuated by 50% in the region of 4.2 GHz. This attenuation is due mainly to the frequency-dependent losses of the trace, both skin-effect and dielectric, which become substantial at multigigahertz frequencies. Designers may be able to ignore these losses when operating in the megahertz range but must now understand and consider them in the design of today's interconnects.

A prime motivation for designers to use S-parameters in digital design is the need to represent these frequency-dependent losses as a number that they can then use to compare the relative merit of various materials and geometries. For instance, **Figure 3** graphically depicts simulations comparing the frequency-dependent losses of a variety of trace topologies, including materials, widths, thicknesses, and other factors. From this information, a designer can rate the relative merit of each topology and determine the optimum one for a design.

The greatest value of S21 to a digital designer is to indicate how much frequency-dependent loss to expect at a given frequency. The pc-board traces are often the largest contributors to these losses, especially with long traces. Designers can determine the same information from TDT (time-domain-transmittance) information, typically quantified as a degradation in rise time. But the plot of the magnitude of S21 versus frequency allows a straightfor-

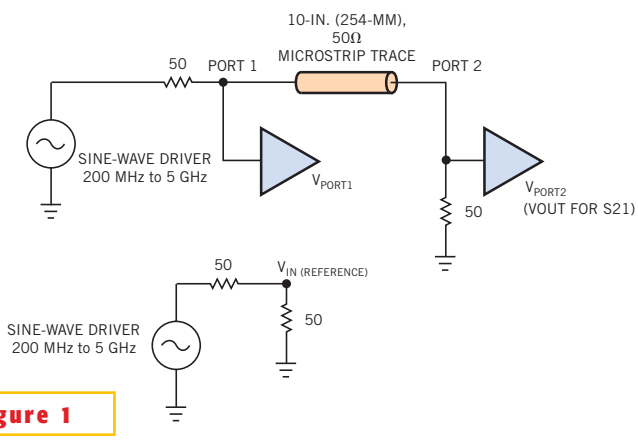

Figure 1 A frequency-domain circuit characterizes a simple pc-board trace.

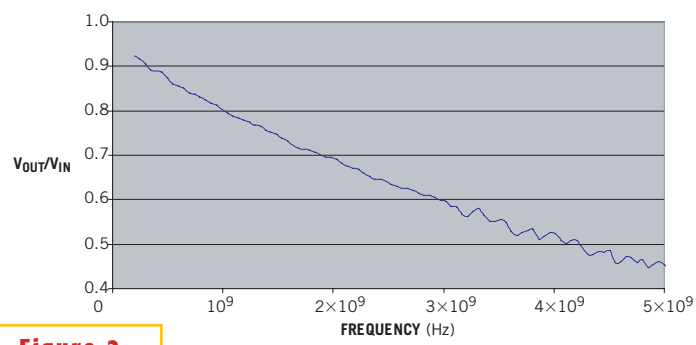

Figure 2 The results of a frequency-domain test demonstrate variation in S21 versus frequency for a simple 10-in. pc-board trace.

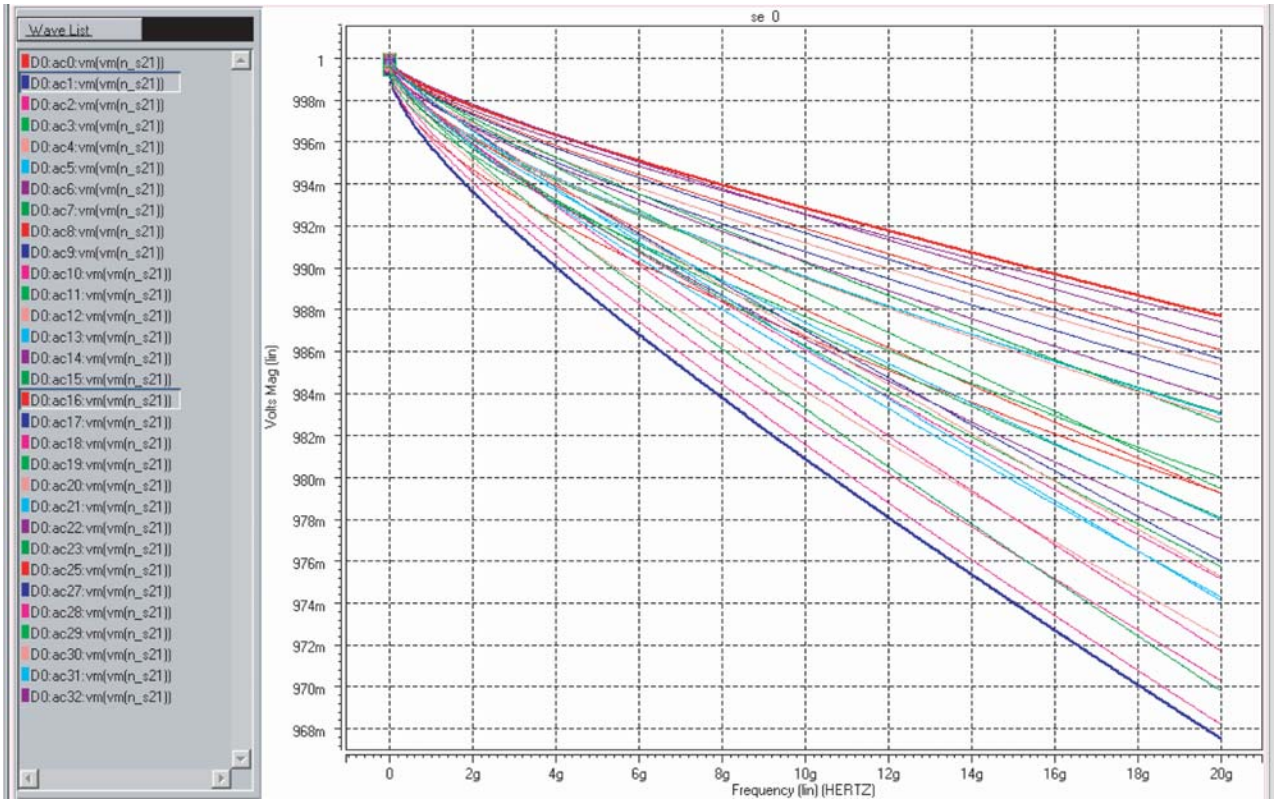

Figure 3 S21 varies over a wide range for a variety of pc-board traces.

ward comparison of lossy structures. Today's network analyzers capture not only the magnitude of the sine wave's voltage at a port, but also the delay in the form of phase information. This article focuses on the magnitude of the received voltage.

NEXT COMES S11

Another often-specified S-parameter is return loss, designated S11. As with S21, it measures V_{OUT}/V_{IN}, but you must in this case carefully construct V_{OUT}. V_{OUT} is the voltage reflected from Port 1, and V_{IN} is the voltage applied at Port 1. The ratio is not merely V_{PORT1}/V_{PORT1}, which is unity. Rather, to properly determine V_{OUT}, subtract $V_{IN(REFERENCE)}$ from the voltage measured at Port 1 and then divide that V_{OUT} value by $V_{IN(REFERENCE)}$ to yield S11.

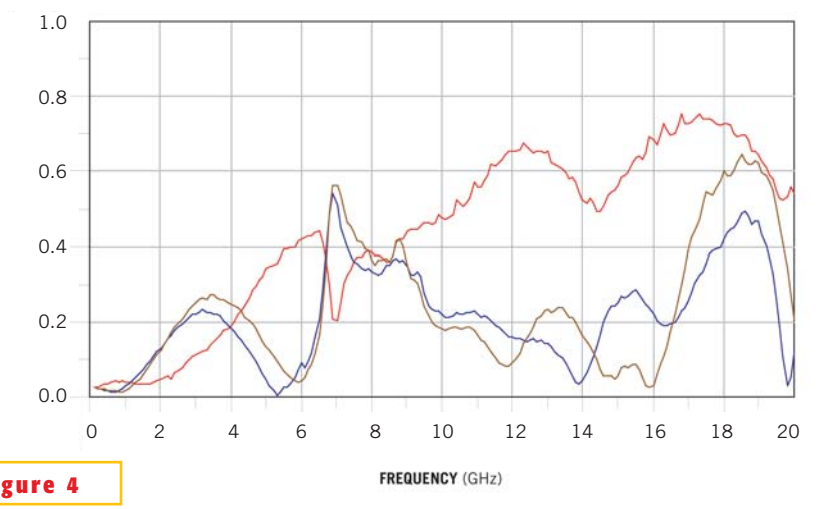

Figure 4 Three connectors show wide differences and complex variations in S11 versus frequency.

Engineers most often use S11 to compare the quality of connectors, vias, and other short structures that constitute impedance discontinuities. To illustrate this concept, **Figure 4** shows a graph of this parameter versus frequency for three connectors. When designing a transmission path, a lower return loss is preferable, because it indicates that less energy is reflected due to impedance mismatches and their resultant discontinuities to the energy flow. Notice that at lower frequencies of less than around 2 GHz, less than 10% of the voltage energy returns to Port 1 due to reflections; at higher frequencies, the impedance mismatches cause more energy to be reflected.

Determining the best connector based on the traces depends on the frequency of operation. At frequencies as high as 4 GHz, the red trace appears best, but from 4 to 7 GHz, the red trace worsens. At frequencies higher than 9 GHz, the red trace is clearly inferior to the other two. This situation demonstrates why designers must specify S-parameters at a particular frequency or range of frequencies and why the value is relevant for only that frequency or range.

When measuring a device, you can display this information in the frequency domain using S-parameters or in the time domain using TDR (time-domain-reflectometry) or eye diagrams. In theory, both domains contain the same information, but for practical design purposes, designers may be able to more easily see critical characteristics in one or the other, depending on the situation. Using TDR on the same connectors provides better insight into their physical properties. In **Figure 5**, the red trace represents a connector with a predominantly inductive impedance discontinuity; the other two are capacitive, ignoring the identical effects before and after the connector. TDR offers little added insight about which connector is better, but you can easily see some important information about the physical properties, such as inductance versus capacitance.

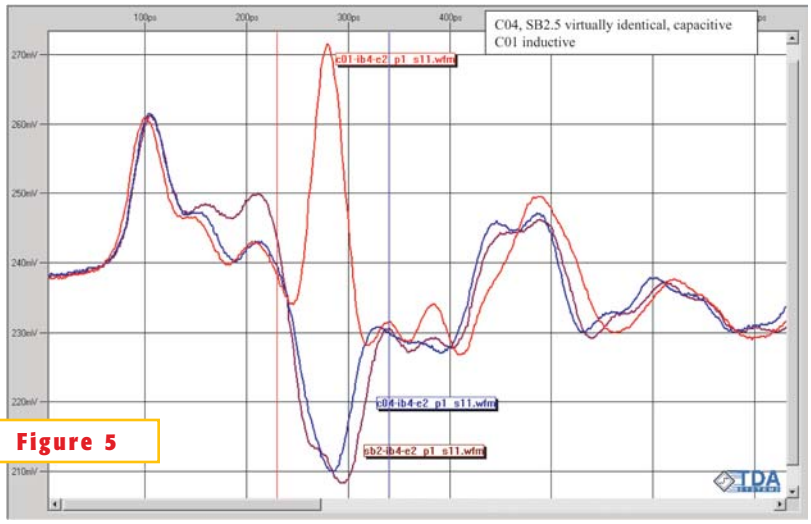

Figure 5

TDR (time-domain reflectometry), used to investigate these three connectors, shows reactive components of their performance.

WHERE ARE THE DECIBELS?

Insertion loss and return loss are unitless ratios of voltage or power. Often, these ratios appear as decibels to represent the power ratios. Engineers working with S-parameters may be uncomfortable with the graphs, because they employ a linear scale of V_{OUT}/V_{IN} magnitude and not a decibel scale of P_{OUT}/P_{IN}. Designers with digital backgrounds might prefer to use V_{OUT}/V_{IN} on the linear scale, especially for S21. For measuring the quality of high-speed digital interconnects, the linear representation of the voltage magnitudes seems more straightforward and applicable. The formulas for conversion are:

$$S(dB) = 20\log_{10}\left[\frac{V_{OUT}(MAGNITUDE)}{V_{IN}(MAGNITUDE)}\right];$$

$$V_{OUT}(MAGNITUDE)/V_{IN}(MAGNITUDE)$$

$$\left[\frac{S(dB)}{20}\right]^{10}.$$

Engineers make the same S-parameter measurements on systems with more than two ports to derive crosstalk, differential, and mixed-mode behaviors, which are necessary for characterizing today's bus interconnects. Although the principles remain the same as for two-port measurements, the mechanics and math of such measurements become challenging.

As another indication of how important S-parameters are becoming, some Spice simulators are now accepting S-parameters as models for interconnect pieces. In this way, a manufacturer can characterize its device using S-parameters and supply them to a simulation engineer for direct use in simulations. Extracting a complicated matrix of inductances, capacitances, resistances, and other model parameters requires no conversion. Engineers should be cautious about this approach, however; directly using S-parameters in simulations presents its own challenges. For example, passivity issues, such as measurement errors

IS A VNA NECESSARY FOR ALL S-PARAMETER MEASUREMENTS?

While performing Ansoft's HFSS (High Frequency Structure Simulator)-to-measurement-correlation study during her summer internship at Intel, University of Washington graduate student Cherry Wakayama noticed a surprising correlation between S-parameters derived from TDR (time-domain-reflectometry) measurements and IConnect software from TDA Systems (www.tdasystems.com), and measurements made directly with a VNA (vector-network analyzer). She demonstrated that, for this digital-interconnect design, the TDR/TDT (time-domain-transmittance)/IConnect combination was a more practical means of measuring S-parameters.

Some distinct advantages of that combination over the VNA measurements are that it is less prone to design and measurement error; it is less costly and easier to do; and it is more manageable for four- and eight-port measurements. The results are more than adequate for the type of structures of interest. Further, the two simple references for TDR/TDT S-parameter extraction are much easier to implement onboard than are the calibration structures used for the VNA.

Wakayama measured a variety of structures with both a VNA and a TDR. The structures comprise a variety of via configurations and a microstrip trace, and each one has a unique S-parameter profile. This approach usually produces excellent correlation, and, when it doesn't, the S-parameters derived from TDR/TDT measurements seem more credible than those from direct VNA measurements, because they better match the physics of the structures. VNA errors derive from imperfect VNA-calibration structures and methods, not inherent failings in the VNA equipment. Engineers will likely encounter similar problems with VNA-calibration structures. See **Reference A** for the paper documenting Wakayama's study and results.

REFERENCE

A. www.tdasystems.com/library/CustPartnerPapers/VNATDRcorr041116.pdf.

causing erroneous gain, can create models that are noncausal, in which an effect appears to occur before the cause, or they can be flawed in other ways. Specialists are currently working on complicated methods to detect and correct these problems.

Engineers working on gigahertz designs will need to be able to understand S-parameters and base judgments about the quality of pieces of their interconnect on them. Making these measurements implies the use of a VNA, which requires a large monetary investment—a price of $150,000 is not unheard of—as well as a long and steep learning curve. Also, proper VNA measurements aren't straightforward; they require expertise in VNA calibration; probing; and settings, such as IF bandwidth, number of points, and others, and they require familiarity with frequency-domain issues, such as magnitude versus phase, resonances, and more. For more than two ports, VNA calibration and measurements can be extremely challenging.

Fortunately, an alternative can accurately derive the S-parameters derived from TDR and TDT measurements that software then processes, performing the Fourier transform to turn the time-domain TDR/TDT measurements into frequency-domain S-parameters (see **sidebar** "Is a VNA necessary for all S-parameter measurements?"). Deriving S-parameters from TDR/TDT measurements is adequate for many purposes and easier than direct measurement with a VNA.

S-parameters are increasingly necessary in the digital-design arena, and they will soon become more common. Their ability to represent frequency-dependent behavior is critical to measuring and rating the merit and quality of high-speed digital interconnects. PCI Express is an example of a current bus that specifies return-loss performance of interconnects. Just as a digital designer unfamiliar with transmission-line concepts would be lost contemplating today's board designs, a designer uncomfortable with S-parameters won't succeed with tomorrow's designs.□

Author's biography

Jeff Loyer is a senior hardware-design engineer with Intel Corp, where he is responsible for developing logic-analyzer products for future high-speed buses, with an emphasis in signal integrity. He holds a bachelor of science degree in electrical-engineering technology from Arizona State University (Tempe); teaches signal-integrity classes both inside and outside Intel; and enjoys the outdoors, tennis, classical guitar, skiing, and teaching.

Acknowledgments

Special thanks to Cherry Wakayama for her work comparing S-parameters from TDR/TDT and VNA, and to Tim Swettlen for his work editing this article.

Talk to us

Post comments via TalkBack at the online version of this article at www.edn.com.