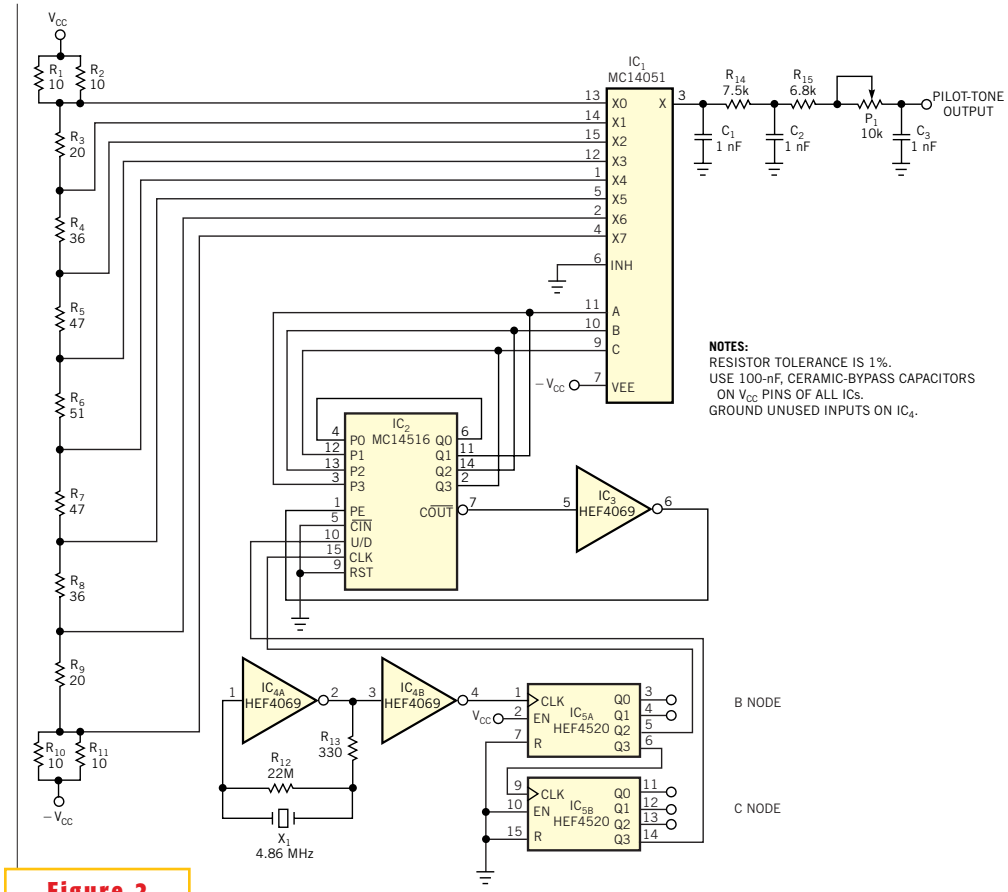

NOTES:
RESISTOR TOLERANCE IS 1%.
USE 100-nF, CERAMIC-BYPASS CAPACITORS ON V_{CC} PINS OF ALL ICs.
GROUND UNUSED INPUTS ON IC_4.

Figure 2

The pilot-tone-generator circuit uses low-cost CMOS-logic circuits plus an analog multiplexer.