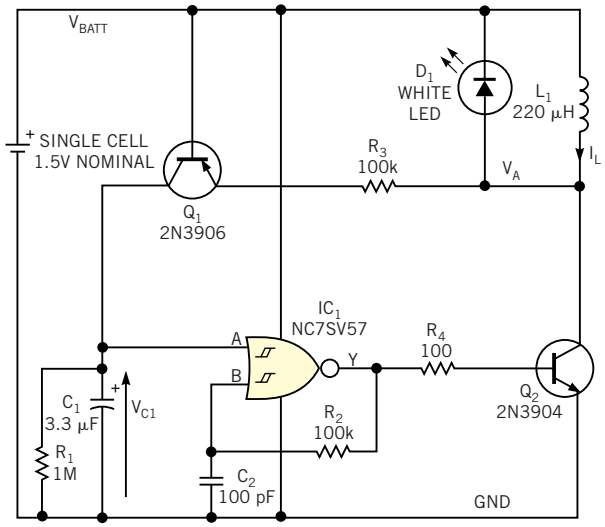

Figure 1 A few inexpensive components can light a white LED from a single primary cell.