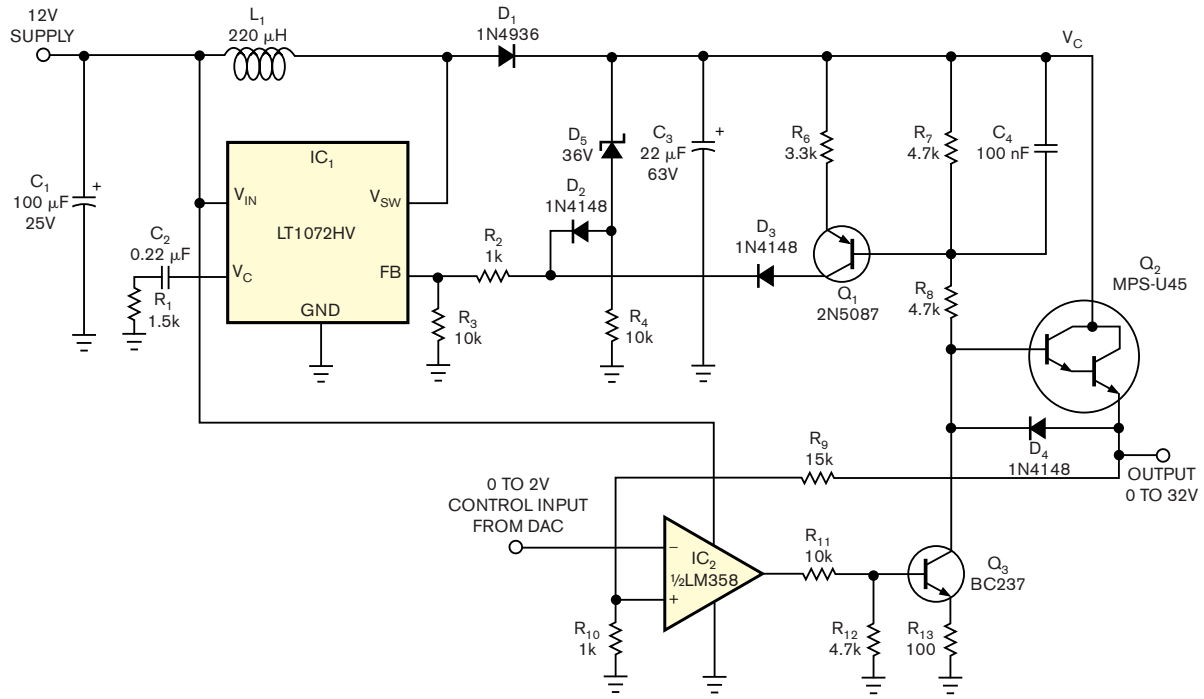

Figure 1 Able to deliver a wide range of output voltages, this regulator circuit automatically selects a linear or a switched mode as required.