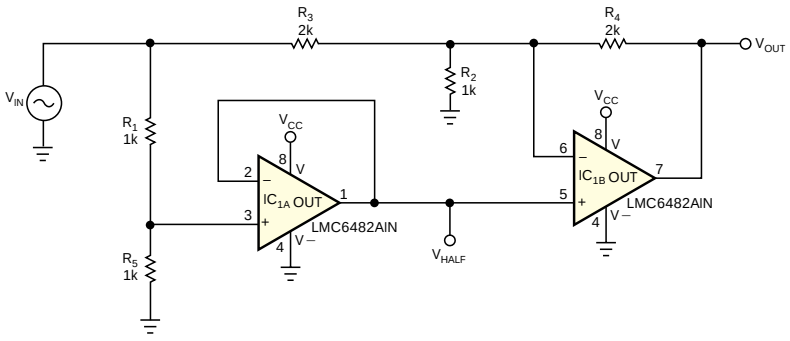

Figure 1 This precision full-wave-rectifier circuit uses two op amps and no diodes. When altering the basic design, note that resistors R_3 and R_4 are both twice the value of R_2 and that R_1 and R_5 are equal.