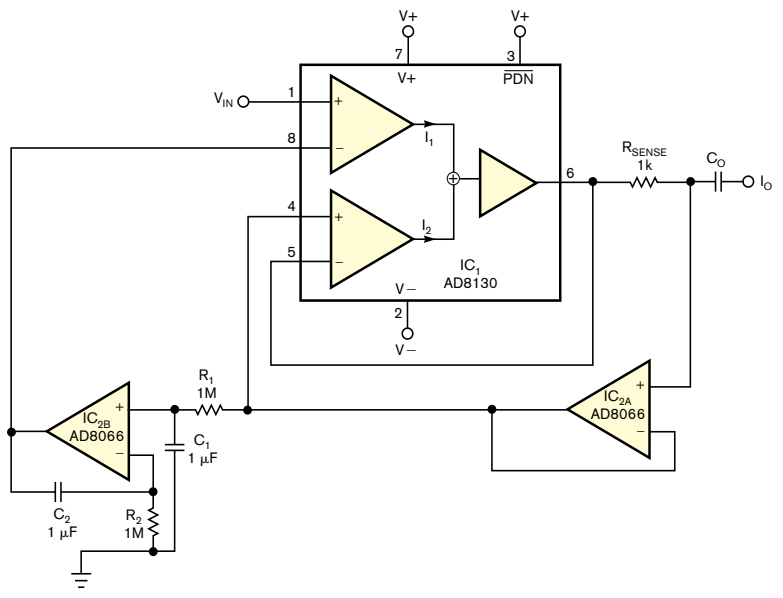

Figure 3 For an ac-coupled current output, add a dc-stabilization loop, IC_{2A} and IC_{2B}.