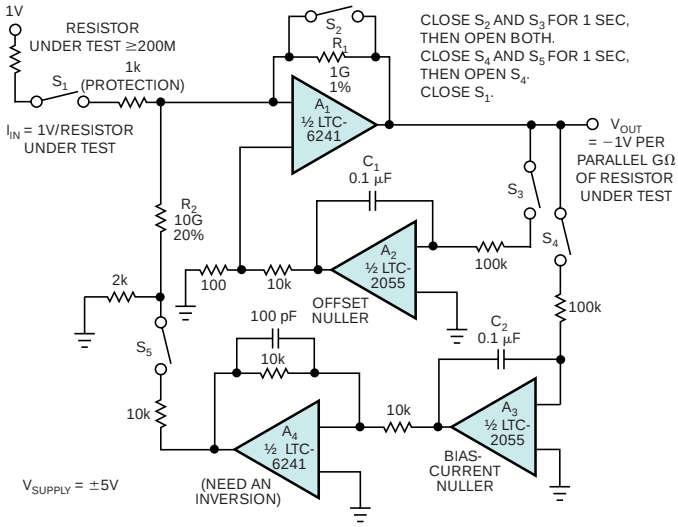

Figure 1 Using nulling techniques is tempting, and you can sometimes make them work with much effort and shielding. But making a “perfect” amplifier like this one becomes expensive and departs from the high reliability of solid-state design. You may be bankrupt before your design reaches production.