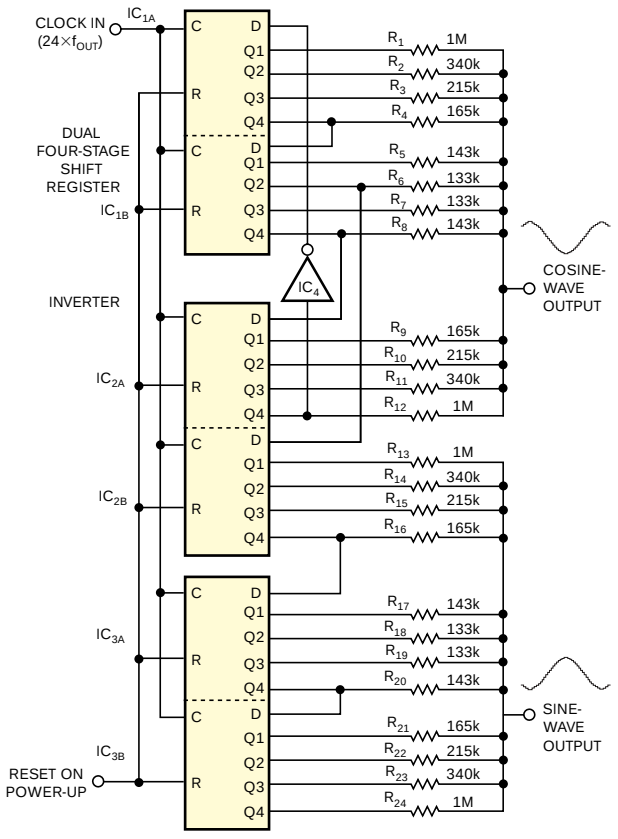

Figure 2 Add a second set of shift registers to generate a cosine wave.