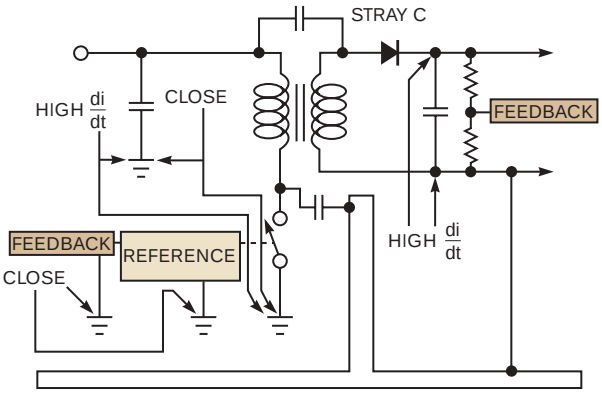

Figure 8 Isolated converters have large circulating currents. Stray capacitance between the transformer windings and between the switch case and the heat sink also cause circulating currents.