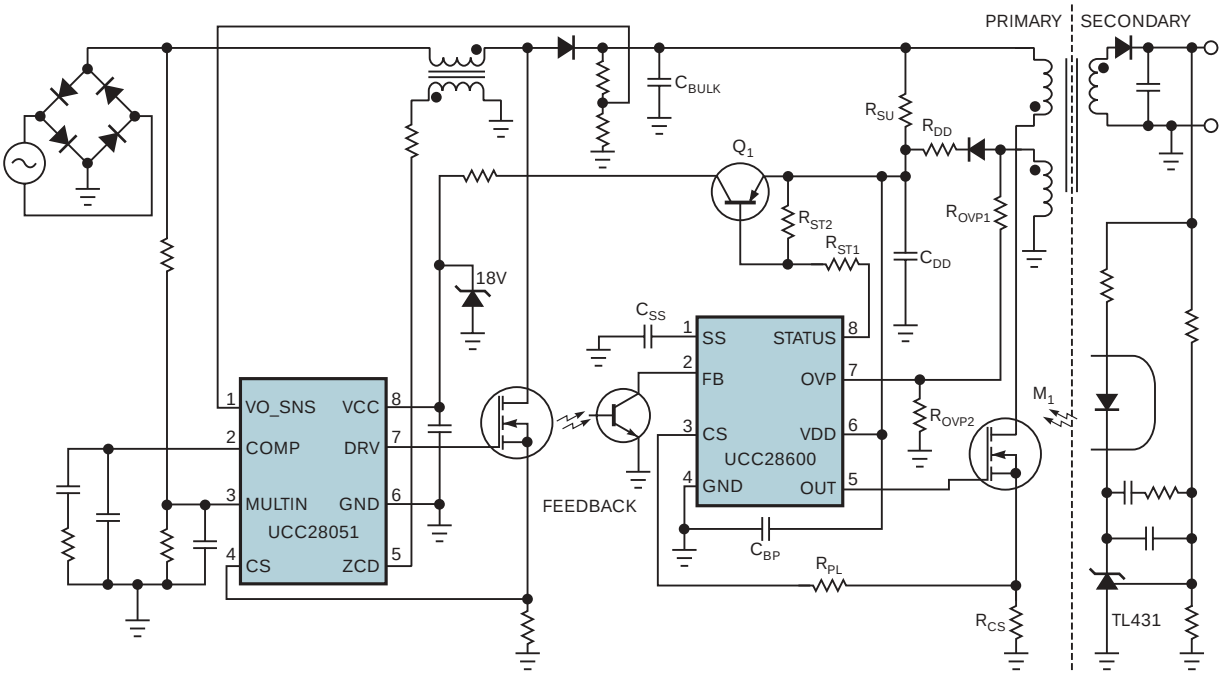

Figure 1 An optoisolator provides voltage feedback for this power-supply circuit. Note the input power-factor-correction circuit that Europe mandates for products that draw more than 60W.