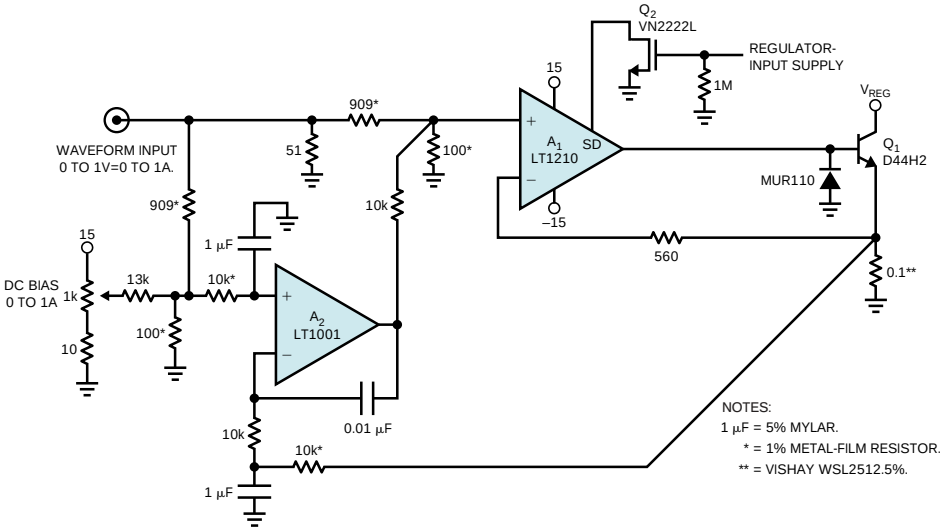

Figure A A_2's feedback controls A_1's dc errors, eliminating trim. Filtering restricts A_2's response to dc and low frequency.