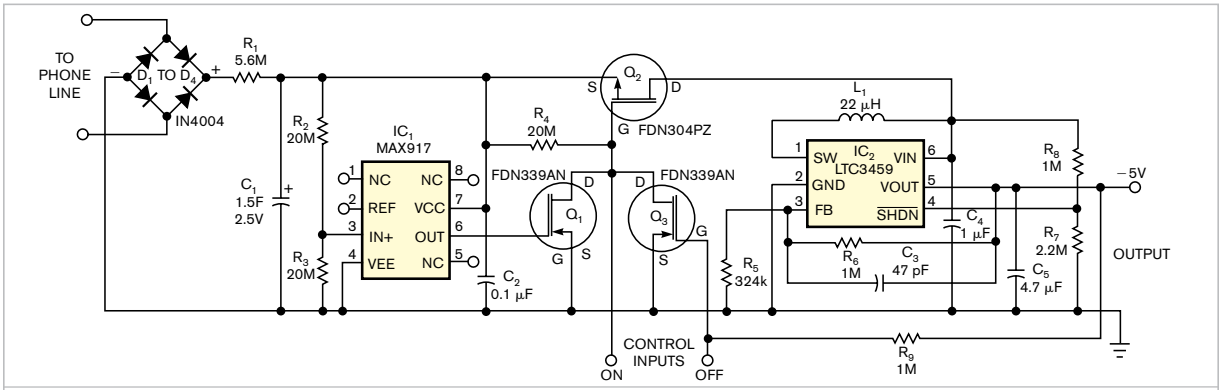

Figure 1 This power-conversion circuit delivers intermittent bursts of regulated voltage from a supercapacitor charged by a trickle of current from a telephone line.