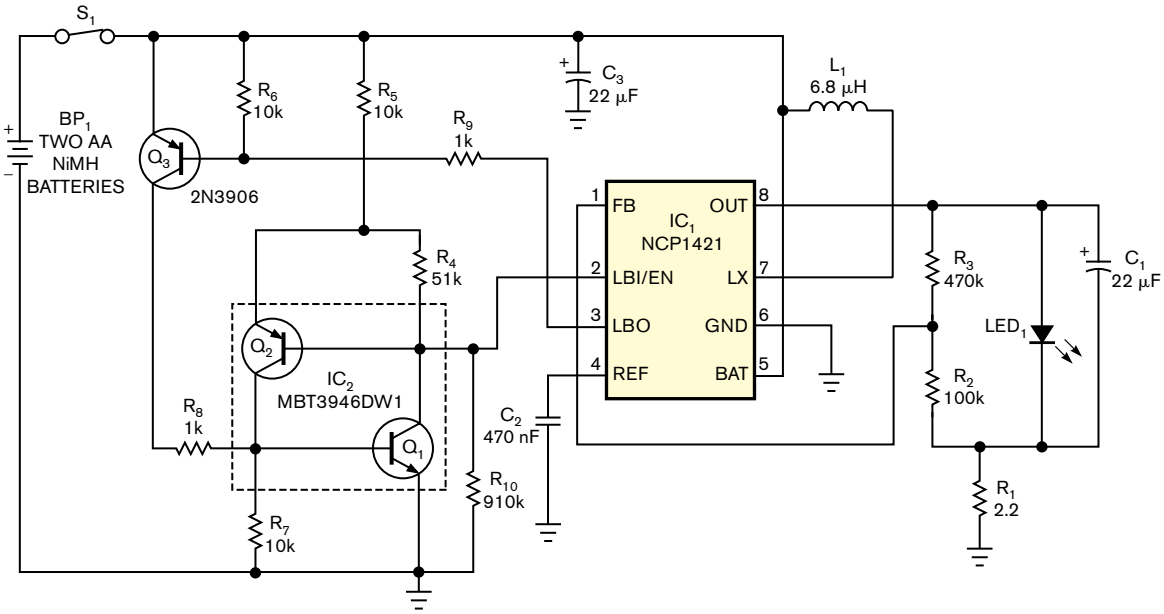

Figure 1 This circuit extends the lives of rechargeable batteries by removing power at a preset voltage and preventing over-discharge.