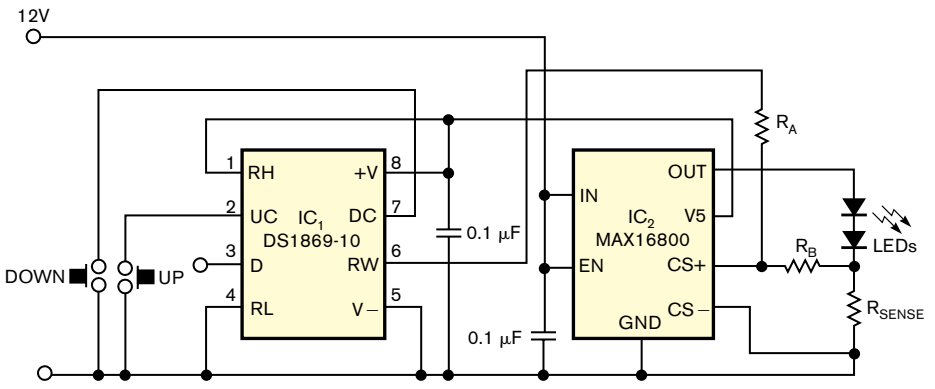

Figure 1 This brightness-control circuit lets you manually adjust the LED brightness using the up and down buttons.