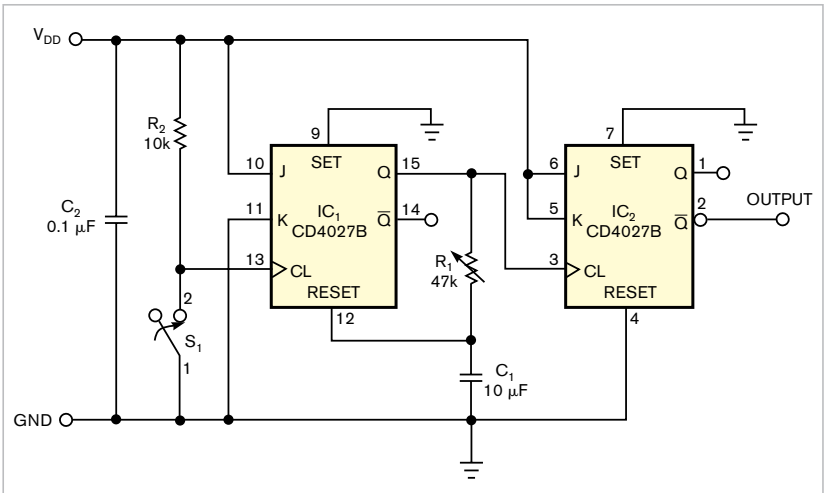

Figure 1 A pair of flip-flops configured as a monoshot and a toggle flip-flop debounce a simple, inexpensive pushbutton switch.