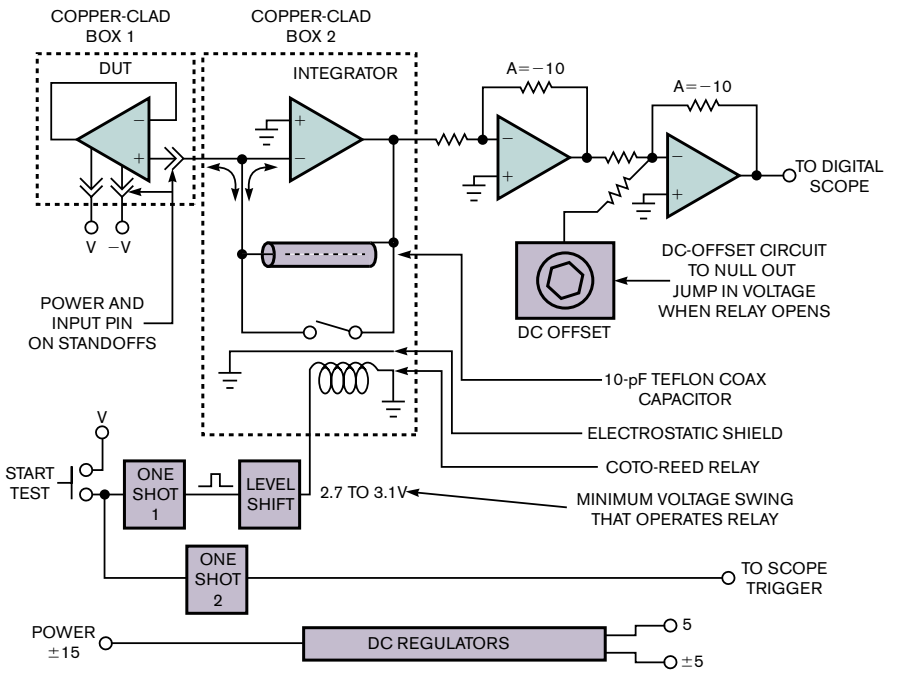

Figure 6 This circuit can resolve 1-fA bias currents coming out of the DUT.