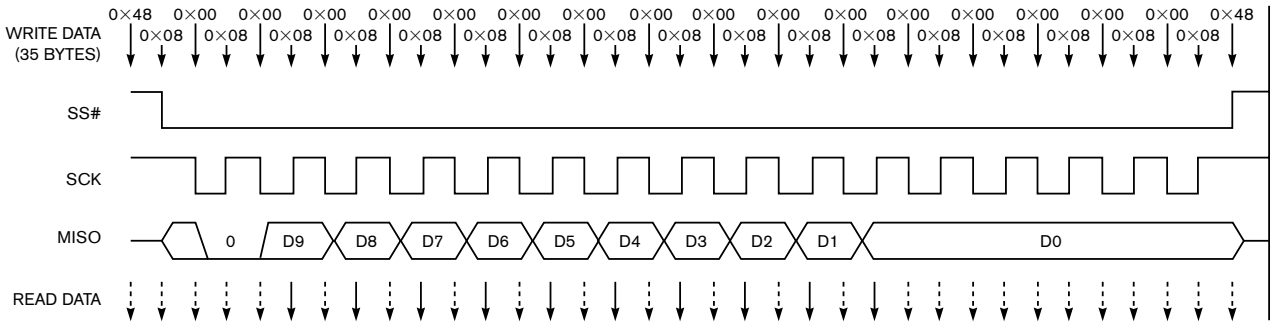

Figure 2 The timing diagram for the AD7814 shows considerable data overhead to download 10 bits of temperature data.