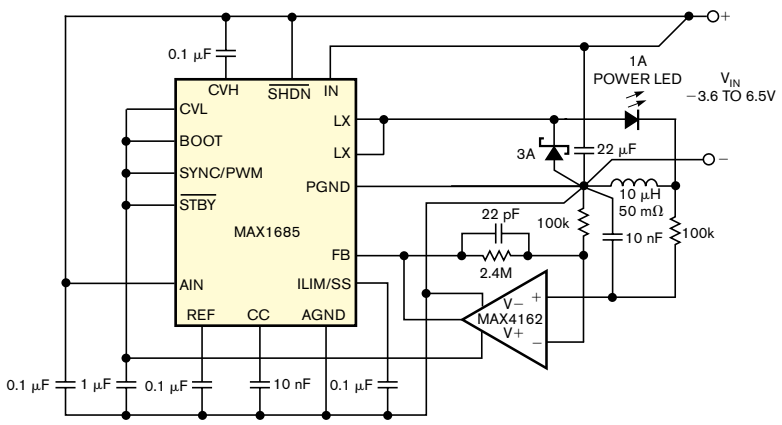

Figure 2 Similar to the circuit in Figure 1, this miniature, 1A, LED driver operates on 3.6 to 6.5V but requires no current-sense resistor.