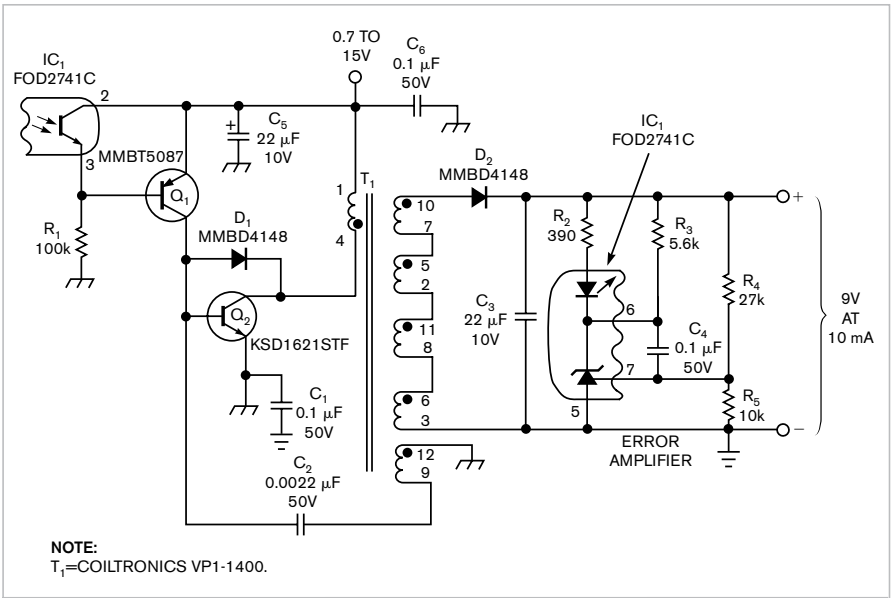

Figure 1 This isolated flyback supply powers a digital-voltmeter module from 0.7 to 15V.