BY CECIL DEISCH • TELLABS OPERATIONS INC

Flyback transformer enables high power-factor and converter efficiency

EVER-TIGHTENING REGULATIONS REQUIRE A POWER FACTOR OF AT LEAST 0.9 AND HIGH EFFICIENCY FOR OFFLINE POWER SUPPLIES. THIS NEW SWITCHING-CONVERTER TOPOLOGY USES A FLYBACK TRANSFORMER AND ACCOMPLISHES BOTH THESE GOALS IN ONE STAGE.

Several switching-converter topologies exist for power converters that operate from the ac mains and must maintain a power factor of 0.9 or better. One topology is a boost converter with a control circuit that measures the switch current and adjusts the switching duty cycle so that the input current tracks the rectified input-ac voltage. However, the output voltage is high—approximately 200V dc in the United States and more than 400V dc in Europe—and has no fixed ground reference. Because of these drawbacks, a second converter, typically a flyback transformer, provides isolation from this high dc voltage, allows a safety ground reference, and provides a regulated lower output voltage of 5 to 25V dc. The addition of this second stage adds extra components and inefficiency: Even if each conversion is 90% efficient, the overall efficiency is only 81%.

In addition, a ripple voltage always exists for a constant load on the dc output. As the single-phase ac input voltage twice passes through zero during each cycle, the load can't draw power because both the input voltage and the input current are near zero. Thus, during these voltage-crossover times, the output capacitor must supply the total load current. You can arbitrarily reduce the ripple voltage on the dc output of the boost converter by increasing the output capacitance but at a cost: In the usual case, another step-down switching converter follows the dc output of the boost converter, so a moderate amount of input ripple is acceptable because the second converter easily regulates it out.

A single-stage-transformer-flyback topology operates from ac-line voltage but has a different switching control that directly gives an isolated low-voltage output at a high power-factor figure (**Figure 1**). Because the design must handle high dc voltages only once and provides low output voltages, the topology uses an isolation flyback transformer. Because the current from ac mains to a flyback transformer is discontinuous, however, the circuit requires a different switching-control scheme to ensure a good power-factor figure. You accomplish this control by appropriately varying the duty factor of the switching converter. For practical reasons, the duty factor should be at least 35 to 40% to keep the voltage and current stresses on the switch at reasonable levels. The new control scheme also assumes a nearly constant error voltage V_E, a scaled and integrated difference between the desired output voltage and a reference voltage, throughout one half-cycle of the ac input. The control scheme also requires continuous current in the flyback transformer.

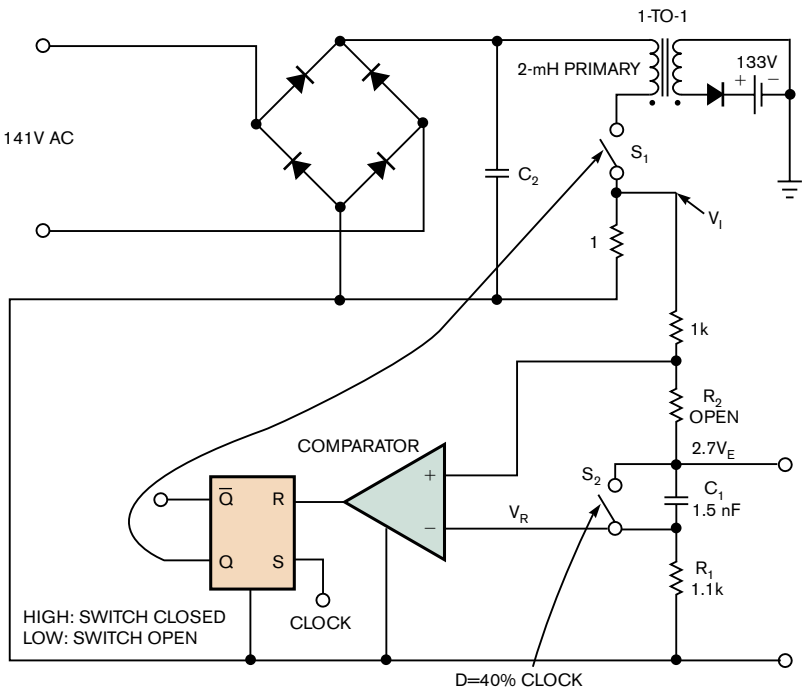

Figure 1 This single-stage transformer-flyback topology for an external power supply operates from ac line voltage but has a different switching control that directly gives an isolated low-voltage output at a power factor of 0.9 or more.

At the beginning of each switch cycle, the control circuit turns on switch S_1. The switch's current through the 1Ω resistor produces the input voltage, V_I, and a nonlinear voltage ramp, V_R, is generated. As the switch current increases while the switch is closed, V_I increases, and, when V_I intersects this nonlinear ramp, the switch turns off and remains off for the rest of that switching cycle. At the beginning of the next cycle, the switch turns on, the nonlinear voltage ramp resets, and the process repeats.

AN EXAMPLE

The converter in **Figure 1** has a maximum 141V-ac sinewave input, corresponding to a peak voltage of 200V, and runs at a 100-kHz switching frequency. The flyback transformer has a primary inductance of 2 mH; the minimum duty factor, D, is 0.4; and the error voltage is 2.7V. Although the transformer's secondary can have any turns ratio that produces the required output voltage, for this example, assume a 1-to-1 turns ratio and a secondary voltage of 133V. This secondary voltage ensures a duty cycle of 0.4 when the input sinewave is 200V. Throughout the rest of the sinewave's voltage input, the duty cycle is greater than 0.4. This set of parameters presents a 100W load to the ac input: 141V rms×0.7A rms.

For this example, **Figure 2** shows the plot of the special nonlinear curve, or ramp, along with several voltage and current operating points. The nonlinear ramp remains at 2.7V until the duty factor reaches 0.4, at which point the ramp

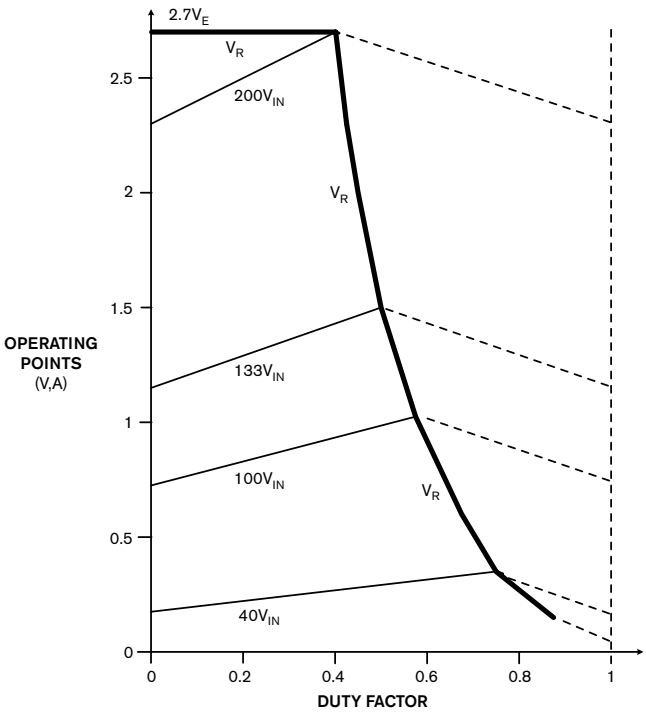

Figure 2 The nonlinear ramp voltage remains at 2.7V until the duty factor reaches 0.4, at which point the ramp voltage begins to fall.

begins to fall with a substantial curvature, which is an advantage. To understand the converter's operation in this example, first consider the switching operation when the peak input ac voltage is 200V and the average input current is 1A. At the beginning of a cycle, switch S_1 turns on, and, at this instant, the switch carries 2.3A, so V_I is 2.3V. As time passes, the inductor current and the voltage ramp up. When 40% of the cycle completes, the voltage rises to 2.7V, which intersects V_R (boldfaced line in **Figure 2**). At this point, the comparator turns off switch S_1, which remains off for the remainder of this cycle. From this 40% point until the 100% point, the flyback transformer dumps its current into the 133V load (the dashed line in **Figure 2**). At the end of the cycle, the flyback current returns to its original starting point of 2.3A. This cycle repeats when the input ac is 200V.

TO CALCULATE THE SHAPE OF THE RAMP VOLTAGE, DETERMINE THE MAXIMUM OPERATING AC VOLTAGE AND HENCE ITS PEAK.

As the input ac voltage drops from its peak of 200V to, say, 133V, the voltage ramp changes sharply. With 133V input and 133V output, the new duty factor is 50%. Additionally, the average input current, I_{IN}, at 133V is 133/200, or 0.665A. At an input voltage of 133V, the switch current begins at approximately 1.16A and ramps up to approximately 1.5A at the point on **Figure 2** where it intersects the voltage ramp at a 50% duty factor. S_1 turns off, and the flyback transformer dumps its current into the load. The secondary current decays (dashed line) and ends at 1.16A. Note that all the secondary-current decays for all input voltages have the same slope because the transformer always discharges into a constant 133V. Thus, for all parts of the input ac voltage, this control method gives proper control of the average input current such that the overall power factor is near 100%. And, if the output load is, for example, 50W rather than 100W, the feedback-error voltage is 1.35V. The ramp voltage remains the same shape but becomes half-amplitude, so the input currents at all input voltages are half, and the power factor remains near 100%.

To calculate the shape of the ramp voltage, determine the maximum operating ac voltage and hence its peak—for example, 141V rms and 200V, respectively. Then, select the switching frequency of the converter—say, 100 kHz or a period of 10 μsec. Taking into account maximum switch voltage and current stresses, select the minimum duty factor—for example, 40%, which corresponds to 4 μsec. Determine the maximum peak power this flyback converter must handle, such as 200W, corresponding to peaks of 200V and 1A. Then, determine the value of the primary inductance to give acceptable switching-current ripple—say, 2 mH. Assume continuous current in the

transformer. Knowing the transformer secondary voltage and the turns ratio, calculate the flyback voltage across the transformer primary when switch S_2 is off—say, 133V.

At a maximum input voltage of 200V, average input current should be 1A. For a peak voltage of 200V and a duty factor of 0.4, the current ripple, ΔI, is $(V \times \Delta t)/L = (200 \times 4\ \mu sec)/2\ mH = 0.4A$ p-p or 0.2A pk. Because the switch is on for a duty factor of 0.4, the average current during the switch's on time is 1A/0.4, or 2.5A. Knowing that the peak current ripple is 0.2A, the current at the end of the on time is 2.5+0.2, or 2.7A. (Current at the beginning of the on time is 2.5−0.2, or 2.3A.) You now know one point on the voltage ramp: For a duty factor of 0.4, the switching current is 2.7A. With this maximum peak current, the corresponding error voltage is 2.7V.

Likewise, calculate the points for all voltages lower than 200V. For example, when the input voltage during part of the sinewave input is 100V and when the error voltage remains at 2.7V, the average input current is 0.5A. With an input voltage of 100V, the new duty factor is $133/(V_{IN}+133)$, or 0.57; the average current during the on time is 0.5A/0.57, or 0.876A; and the peak ripple current is 0.143A, so the current at turn-off is 0.876+0.143, or 1.02A. Thus, this new 100V point on the ramp voltage is a duty factor of 0.57 and a current of 1.02A.

This ramp shape applies only to a ramp voltage of 2.7V for this example. That is, the scaled shape of this ramp curve differs slightly as the error voltage changes. If you plot the ramp curve for V_E=1V, corresponding to a load of approximately 37W, the resulting curve differs slightly from the curve for an error voltage of 2.7V scaled by the factor of 1/2.7, or 0.37. The inductor current has ripple. Without ripple, curve scaling would be exact. For most practical applications, this slight variation is of no consequence because the resulting power factor is still excellent.

The shape of this ramp looks suspiciously like a decaying exponential of a discharging RC circuit, and, if you use appropriate values, you can almost exactly match the shape. For this example, appropriate values are 1.1 kΩ for R_1, 1.5 nF for C_1, and 2.7V for the discharging voltage. Thus, this new control circuit needs no special circuits or operational amplifiers to generate a voltage-comparison ramp; it requires just a simple RC circuit with a switch to discharge the capacitor to 0V at the end of each cycle and hold the voltage at 0V until the duty factor reaches 0.4, at which time the switch opens, and the exponential discharging curve begins. Discharging continues until the curve approaches 0V when the duty factor is 1. By varying the value of R_1, R_2, and C_1 in **Figure 1**, you can make approximations to the "ideal" ramp-voltage curve. For this example, R_2 is open, and the fit to the ideal ramp-voltage curve is excellent. Even crude approximations to this ideal curve still yield power factors of 95% or more, so wide component tolerances are acceptable.

WALL WART VERSUS FLYBACK

Millions of battery-powered consumer products need an external power supply to recharge the batteries or operate from line voltage. These chargers are typically simple "wall warts" that you plug into ac sockets. Each wall wart comprises a basic step-down transformer, a full-wave-bridge rectifier, and an output-filter capacitor. These simple, rugged, inexpensive, and reliable devices provide excellent high-voltage isolation. Their main drawbacks are poor efficiency; large bulk and weight; wide dc-output voltages due to line and load changes; and low power factors—that is, they draw huge current peaks at just the peak of the ac voltage. A typical 15V-dc, 25W wall wart might have a power factor of only 70%. Even with a large-value output-filter capacitor, ripple might typically be approximately 300 mV p-p. If the load varies by a ratio of 3-to-1 and the line varies by ±20%, the dc output voltage can easily vary from 11 to nearly 20V. Despite this wide dc-output range, wall warts are adequate for many consumer devices because the power supplies inside these devices easily regulate out the ripple and the wide output-voltage range. At light loads and high ac-mains voltage, a wall wart may provide efficiency approaching 90% but a power factor of only 60%. At heavy loads and low ac-line voltage, efficiency may be less than 75%, and the power factor may be approximately 75%.

A flyback transformer using the new power-factor-control method generates the same 15V dc and 25W. It provides an essentially constant output voltage despite changes in line and load, a power factor of more than 95%, efficiency of more than 80%, peak efficiency of 90% over a five- to one-load range, an output-ripple voltage less than one-third that of a wall wart with the same-value output capacitor, and substantially lower weight and size.

MORE AT EDN.COM

Go to www.edn.com/ms4264 and click on Feedback Loop to post a comment on this article.

OVERVOLTAGE PERFORMANCE

This example assumes a minimum duty factor of 40%, which corresponds to a maximum input-voltage peak of 200V. What happens if the ac line input has a momentary overvoltage of, say, 300V and an error voltage of only 2.7V? Using the ramp of **Figure 2** and knowing that the flyback voltage is 133V, the duty factor must be 0.307 and must lie on the ramp-voltage curve. But this point lies on the X axis because the ramp voltage doesn't start to decrease until the duty factor reaches 40%. Thus, the peak current when the input voltage is 300V is just 2.7A. From this peak current point and knowing that the inductance is 2 mH, you can easily calculate the average current during the switch's on time, 2.47A, and the average input current, just 0.76A over the switching cycle. That is, the average input current, 0.76A, when the input voltage is 300V is less than the average input current, 1A, when the input voltage is 200V. Thus, this control circuit has an advantageous current-limiting property during input-overvoltage surges.

ADDITIONAL COMPONENTS

This new converter-control circuit doesn't show many of the other components you would need to build a complete switching converter. Capacitor C_2, which handles only the high-frequency switching currents, looks almost like an open-circuit at the low ac-mains frequency. The flyback transformer needs a snubber circuit. Because much of the operation happens for duty factors greater than 50%, the circuit also requires slope compensation to ensure stability. If the switch current hasn't ramped up to the V_R voltage before the duty factor reaches 100%, the control needs a default, such as 95% duty factor, to turn off the switch for that cycle. The circuit also most likely requires a limiting method for controlling the maximum value of the error voltage. The circuit will also need components to control conducted emissions if the value of C_2 is too low.

The single-stage power-factor flyback converter probably won't meet the needs of applications requiring low output-voltage ripple and fast transient response because the feedback loop of the power-factor flyback converter is deliberately slow. Also, the circuit has no location for drawing power when the ac input twice goes through zero during cycle. So, the output capacitor must supply all the output-load current. Therefore, the output must have 120-Hz ripple for a 60-Hz line voltage; the amount of ripple depends only on the size of the capacitor. You could use a traditional boost-PFC (power-factor-correction) converter and follow that part with a separate step-down converter. This approach uses more parts but provides isolation, fast transient response, and low ripple.

Because the load of this power-factor-correction flyback converter must tolerate some amount of ripple, the load may also be able to tolerate a looser voltage regulation. In this case, the power-factor-correction flyback converter can probably use the primary flyback voltage for adequate output-voltage regulation. This approach would save the cost of implementing an optical coupler and its associated circuit. EDN

AUTHOR'S BIOGRAPHY

Cecil Deisch is a staff engineer at Tellabs Operations Inc, where he has worked for 15 years. He has a master's degree in electrical engineering from New York University (New York) and holds Patent No. 4,148,097 for peak current control for PWM (pulse-width-modulated) switching converters. His other interests include thermodynamics, economics, and mathematics.