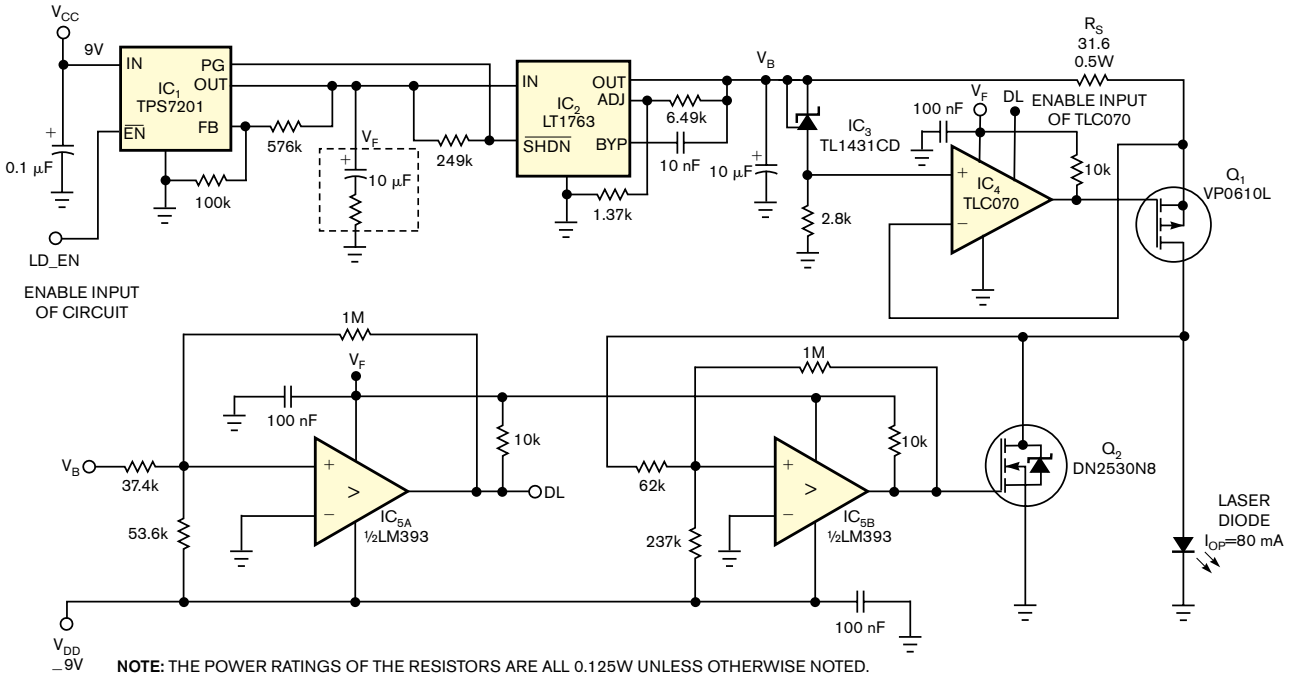

Figure 1 This laser-diode-drive circuit provides a constant current and protection against input overvoltages and start-up transients.