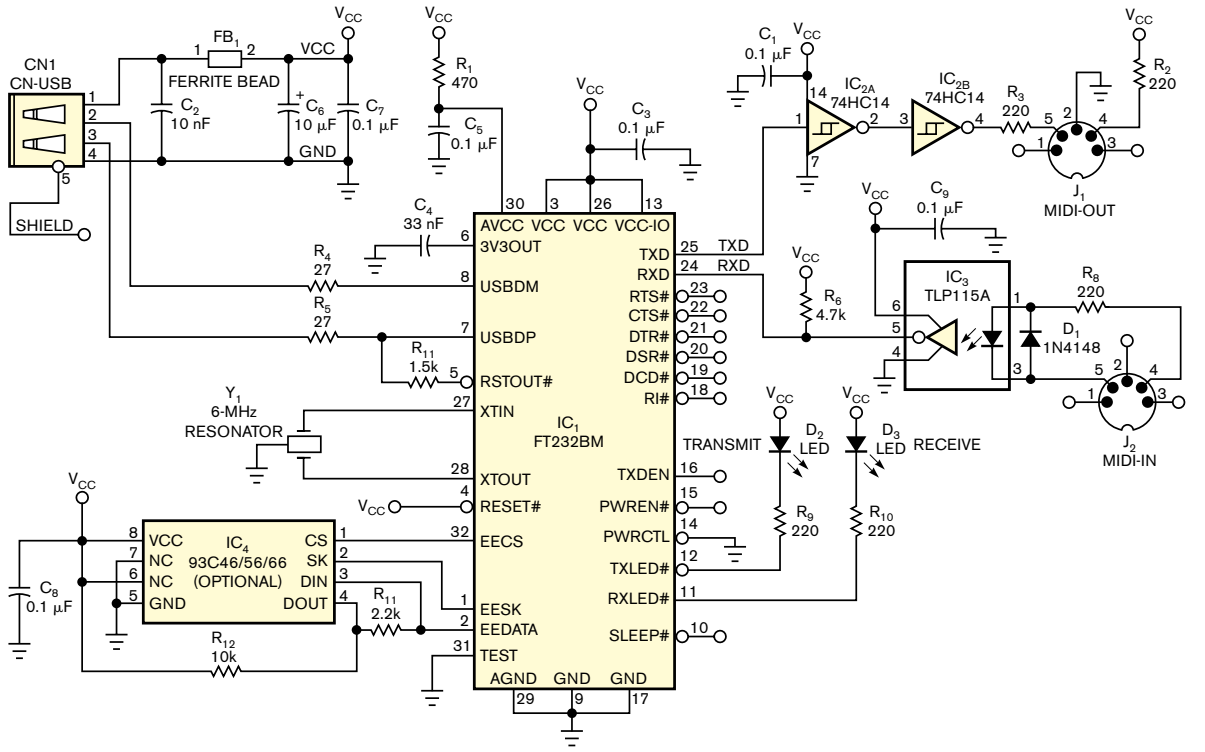

Figure 1 This USB-to-MIDI interface uses the FT232BM, a USB-to-UART interface chip that you need not program.