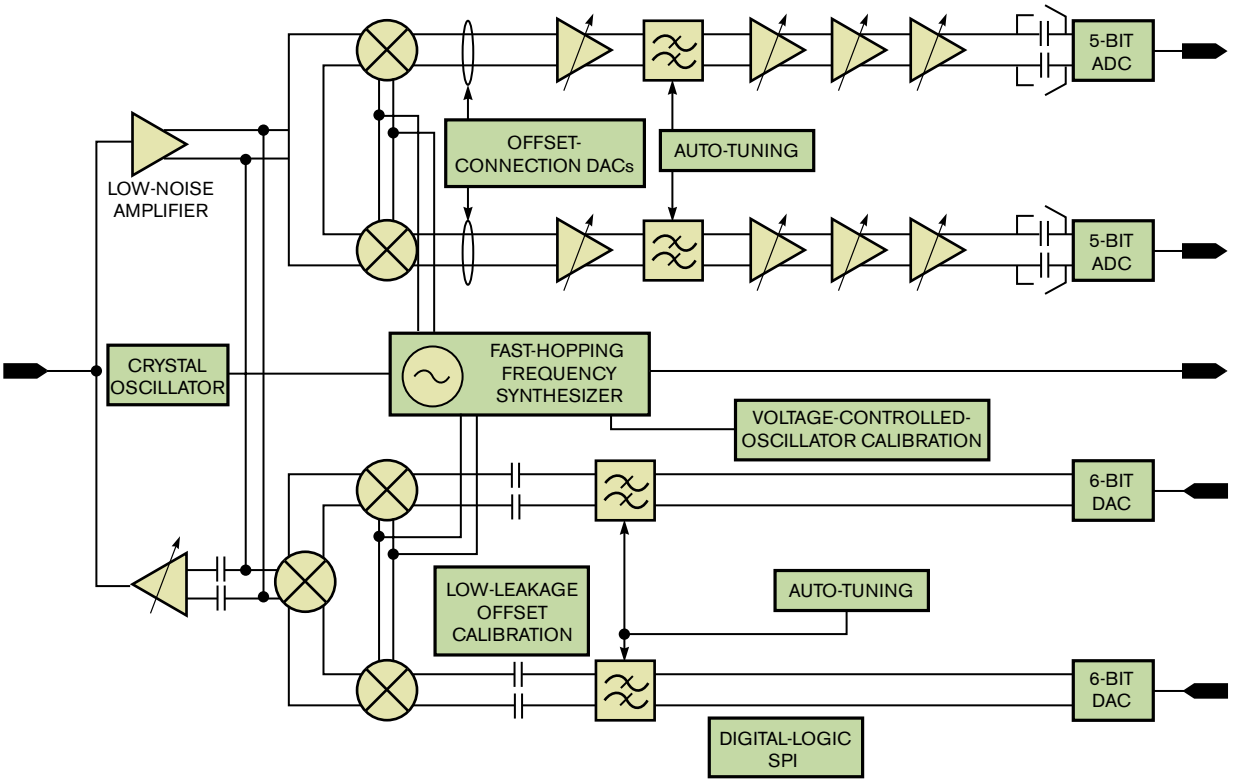

Figure 3 A UWB transceiver follows the basic pattern of the design in Figure 2 but adds functional blocks to support the UWB air interface (courtesy MIPS).