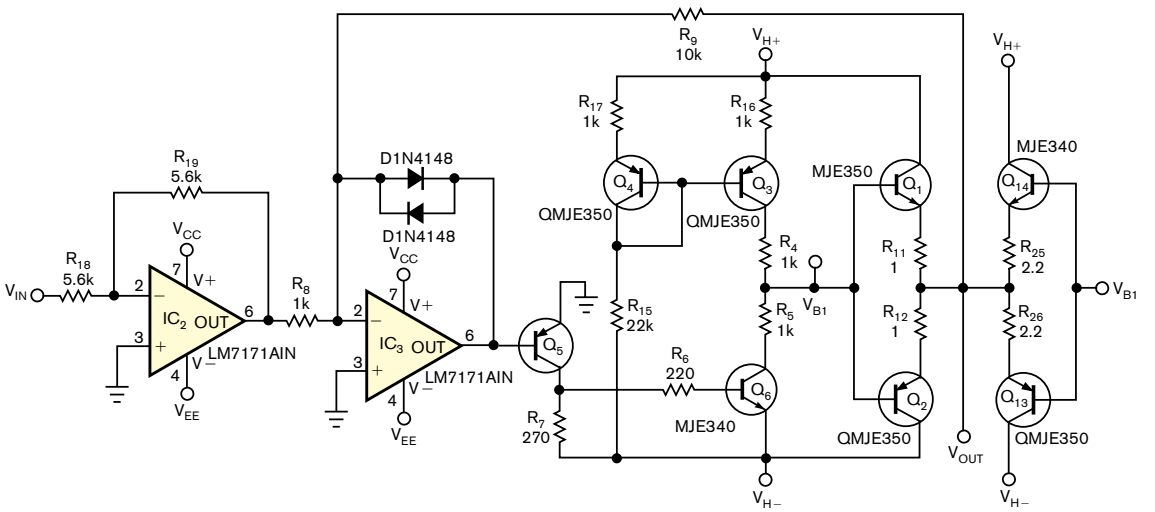

Figure 1 This high-frequency, high-voltage amplifier can drive the capacitive load from a PVDF (polyvinylidene-fluoride) piezoelectric transducer.