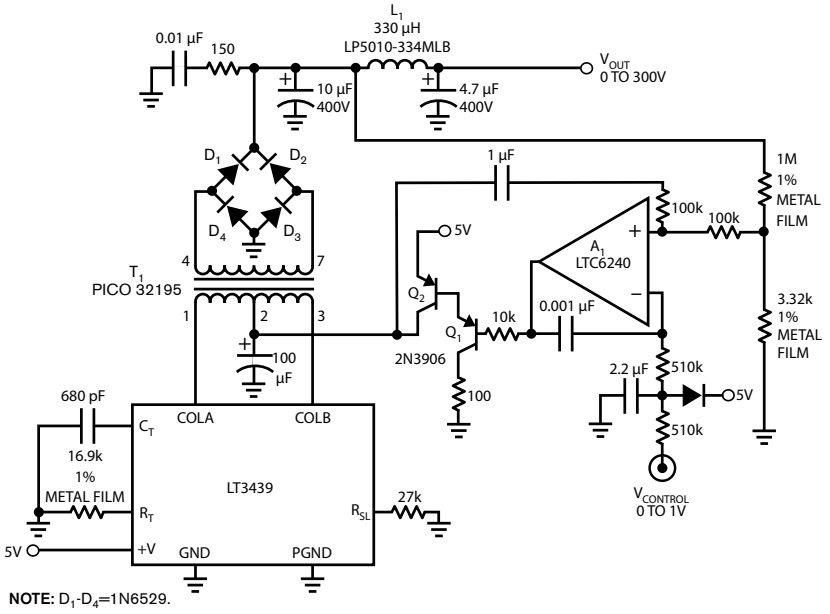

Figure 16 This circuit provides full-range adjustability. The control input, $V_{CONTROL}$, sets transformer T_1's drive voltage through Q_1 and Q_2. A 1-MΩ/3.32-kΩ resistive divider provides feedback that A_1's input capacitors stabilize. Waveforms are similar to those of Figure 13. The output noise is 100 µV p-p.