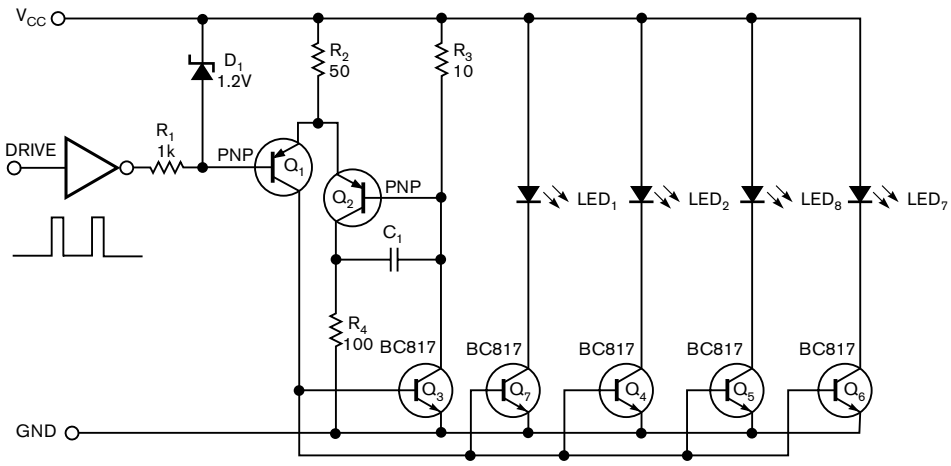

Figure 1 A pulsed-current mirror comprising transistors Q_4 through Q_7 drives multiple LEDs from a low supply voltage.