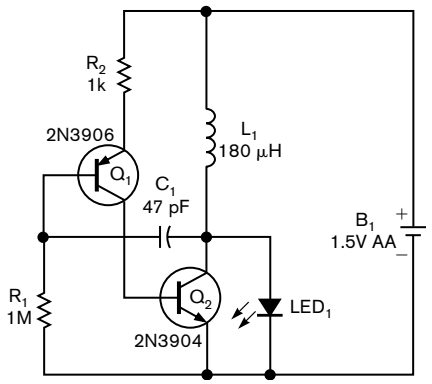

Figure 1 This two-transistor circuit operates as a high-gain amplifier to light LEDs.