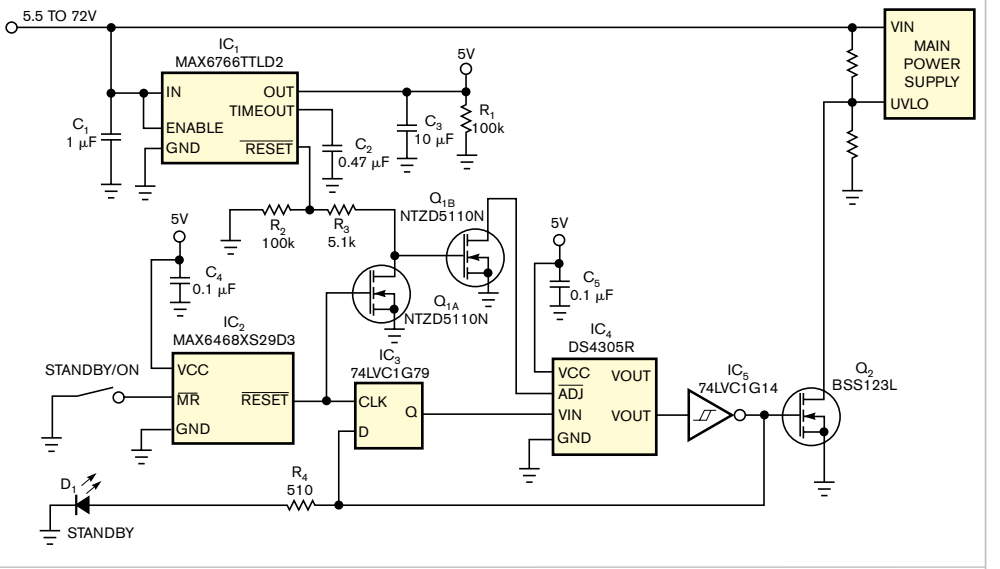

Figure 1 The circuit remembers its standby or on state if power fails with no operator present.