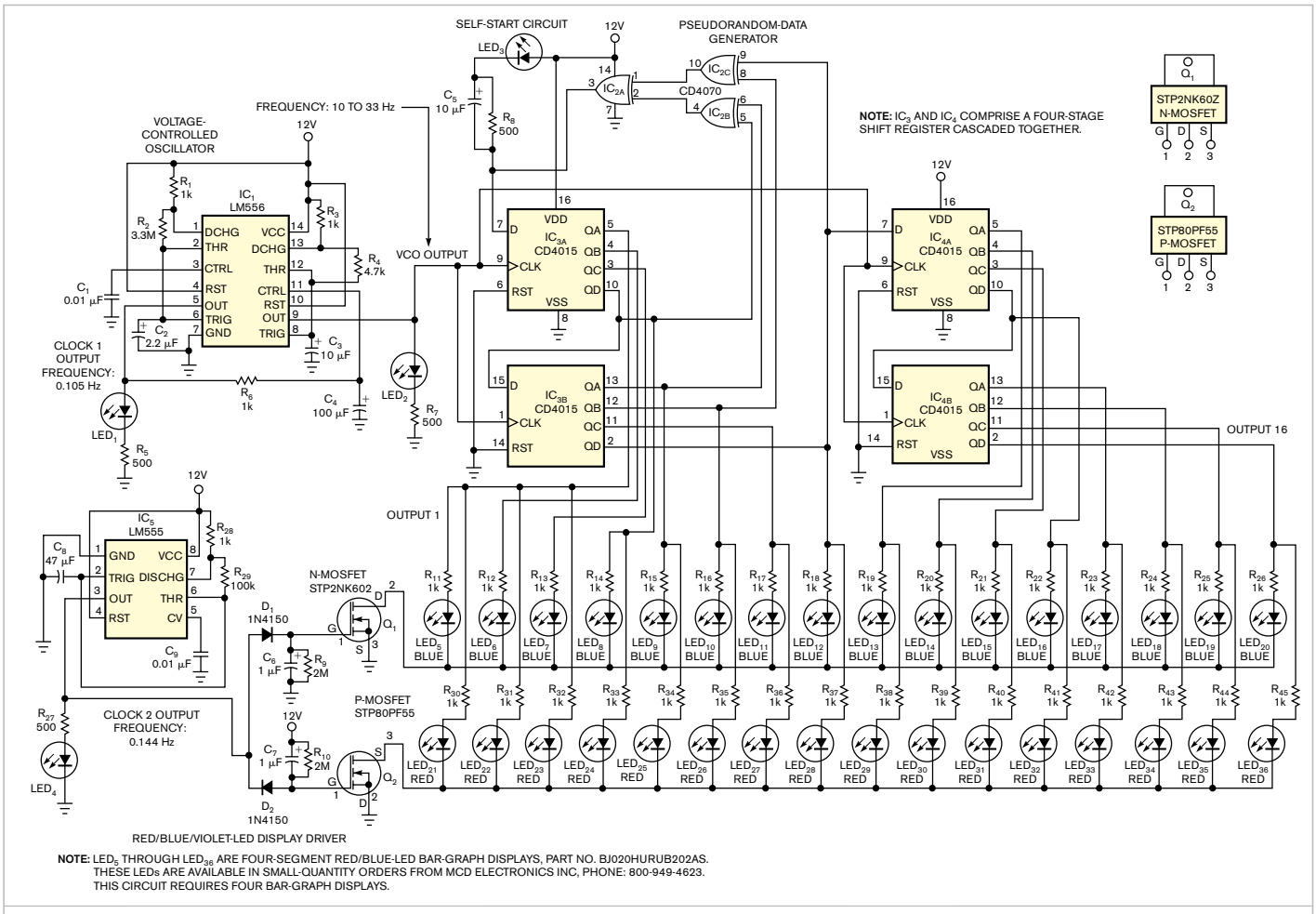

Figure 1 Two 555 timers create the clock pulses that drive blue and red LEDs.