Figure 1

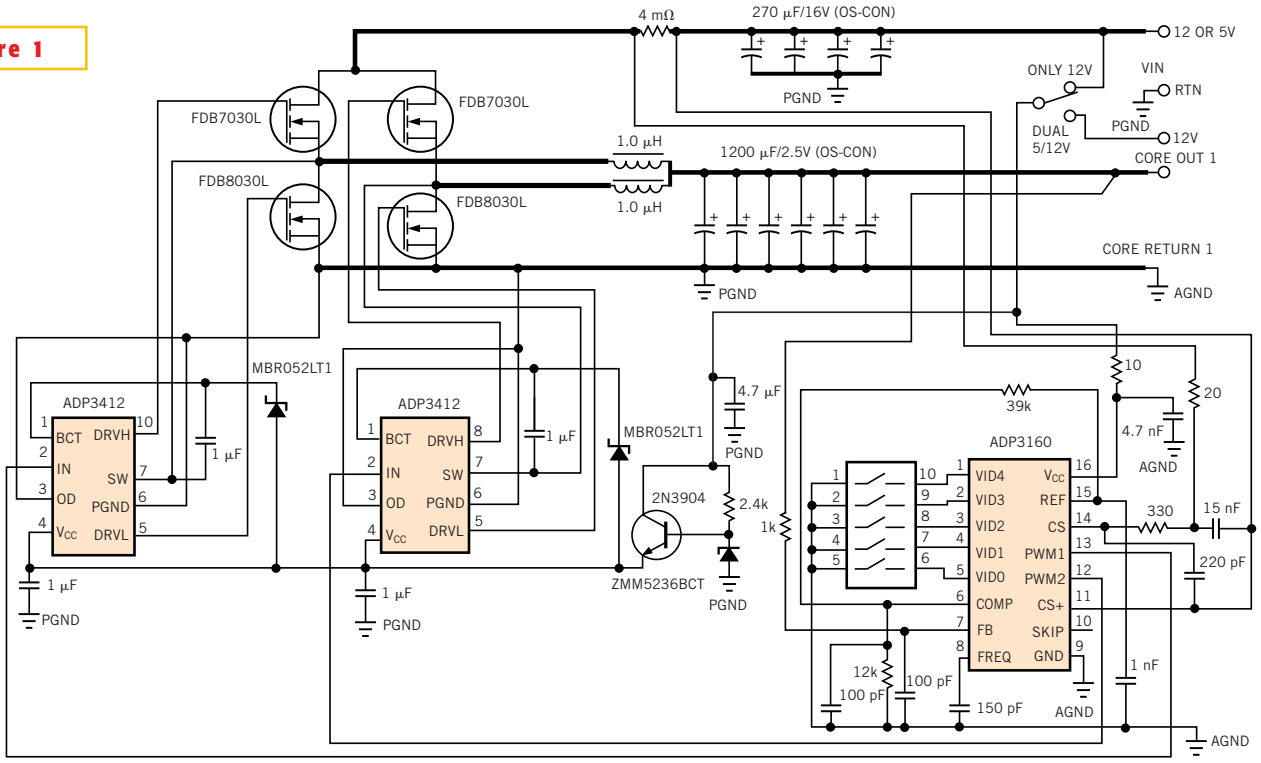

This two-phase, 1.6V, 60A core supply meets the static and transient requirements of the VRM9.0 specification.