Edited by Bill Travis and Anne Watson Swager

Current-sense amplifier precisely measures low side

John Ursoleo, Silicon Mountain Design, Colorado Springs, CO

SEVERAL INTEGRATED HIGH-side current-sense amplifiers, such as the MAX4172 (Maxim Integrated Products, maxim-ic.com), make it easy to measure the current from a positive power supply. With a couple of resistors, these devices provide a ground-referenced voltage output that is proportional to the delivered current (**Figure 1a**).

Unfortunately, no equivalent devices implement a true low-side current sense for negative supplies. You can use the high-side devices to measure current from negative supplies, but this approach has drawbacks. The sense resistor must be in the load's ground lead, which effectively floats the load off ground by the sense resistor voltage, and the output voltage, V_{OUT}, is referred to the negative supply and not to ground (**Figure 1b**). Both of these characteristics are undesirable.

The circuit in **Figure 2** implements a true low-side, precision current-sense amplifier that provides a ground-referenced voltage proportional to the negative supply current and that does not float the load off ground. This circuit is similar to the circuit in the MAX4172 but is reconfigured for a negative supply. When current flows through the load, a proportional voltage, V_{SENSE}, develops across the current-sense resistor R_{SENSE}: $V_{SENSE}=I_{LOAD}\cdot R_{SENSE}$. To stay balanced, the op amp raises its output until V_{SENSE} also appears across R_1. The current through R_1 equals V_{SENSE}/R_1, which is identical to the current through R_2, which scales V_{OUT}. The equation for V_{OUT} is then as follows:

$$V_{OUT} = -\frac{V_{SENSE}}{R_1}\bullet R_2 = I_{LOAD}\bullet R_{SENSE}\bullet\frac{R_2}{R_1}.$$

Figure 1

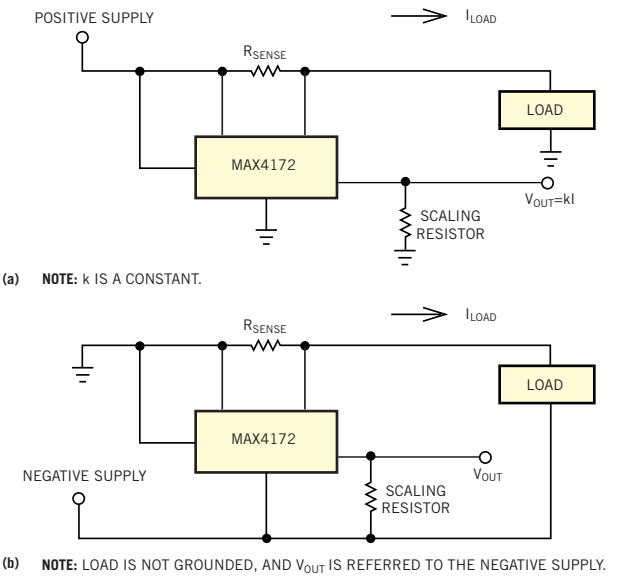

High-side current-sense amplifier ICs, such as the MAX4172, make it easy to measure positive-power-supply current (a). Although you can also use these devices to measure current from negative supplies (b), the resultant circuit has undesirable characteristics.

Figure 2

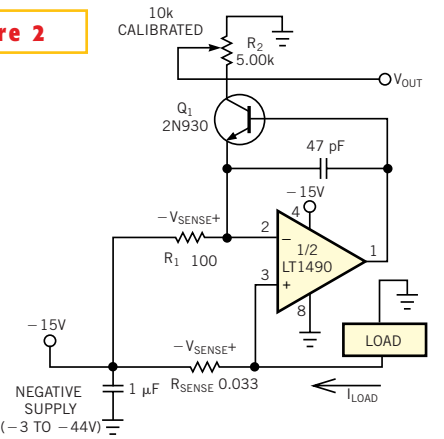

A true low-side, precision current-sense amplifier provides a ground-referenced voltage that is proportional to the negative supply current and does not float the load off ground.

Current-sense amplifier precisely measures low side **193**

Connect a modem to a Basic Stamp **194**

Bias supply provides short-circuit protection **196**

Analog multiplier works over large frequency range **200**

5V logic pulser is battery-powered **204**

To minimize the effects of the op amp's offset voltage, the voltage developed across the sense resistor should be larger than this offset value. The circuit in **Figure 2** develops a 0 to −5V output for load currents of 0 to 3A and is accurate to about 1%.

You must adhere to the following component restrictions: The op amp needs to have an input common-mode range that includes the negative rail. The op-amp output needs to be a rail-to-rail type. Q_1 should have a high beta at low currents to minimize errors due to base current. Keep R_1 small so that op-amp bias currents are insignificant. For greater accuracy, you can replace Q_1 with an enhancement-mode n-channel MOSFET to eliminate base-current errors; however, operation as low as 3V is then unlikely. You can also replace the op amp with a lower offset device at the expense of high-voltage operation to −44V. (DI #2410)

To Vote For This Design, Circle No. 433

Connect a modem to a Basic Stamp

Ken Gracey, Parallax Inc, Rocklin, CA

The 2400-bps modem in **Figure 1** makes it easy to connect a Basic Stamp (Parallax Inc, www.parallaxinc.com) to a telephone modem. Using this circuit, you can call home via your PC and find out if the house is still there. The Basic Stamp2, BS2-IC, has the necessary programming space, and a 64-kbyte StampMEM memory-storage board enhances site data collection.

In the setup configuration of **Figure 1**, the Basic Stamp can read data from sensors and store the result on the StampMEM board. When the modem receives a call, the Basic Stamp reads the StampMEM board and transfers the stored data directly to the modem, which in turn sends it to the remote PC or Basic Stamp terminal that has a modem interface and standard communication software.

Figure 1

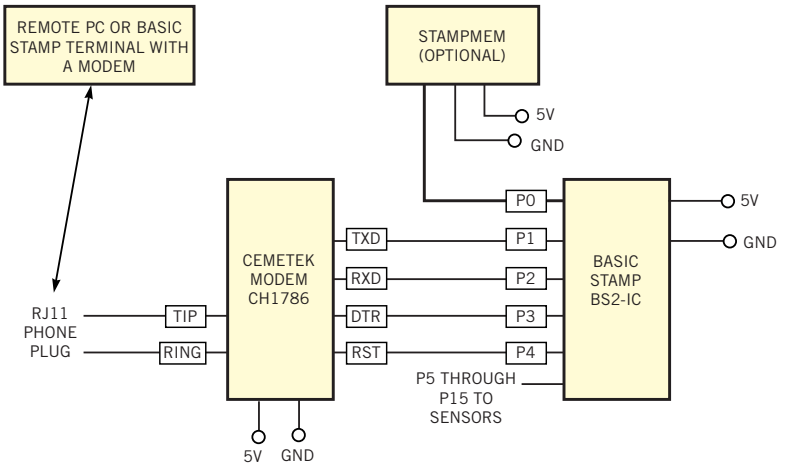

The 2400-bps modem allows you to connect a modem to a Basic Stamp.

Simple software code performs data movement to and from the modem. The software collects sensor data and places the modem in an auto-answer mode for a short time and loops back to collect more data. When a remote terminal sends a phone call, the looping stops, and the Basic Stamp answers the phone call by requesting the terminal to type "start." After receiving the typed input from the remote terminal, the Basic Stamp reads the StampMEM data-storage board and transfers the entire stored data to the remote terminal. (You can download the program from *EDN*'s Web site, www.ednmag.com. Click on "Search Databases" and then enter the Software Center to download the file for Design Idea #2411.)

After data transfer is complete, the Basic Stamp hangs up the phone call, returns to collecting sensor data, and awaits another phone call. The software communications between the Basic Stamp, modem, and memory data storage are through the "serin" and "serout" commands. This approach allows the Basic Stamp to use just a few I/O pins, leaving at least 11 pins for the sensors' data input. The program includes no sensor inputs; doing so would complicate the software. The StampMEM memory data storage is unnecessary if you intend to retain the data within the available memory on the Basic Stamp. You can easily connect many data-storage devices and EEPROM chips to the circuit. Sensor and data-storage-device software codes are available for free on the Parallax Web site. (DI #2411)

To Vote For This Design, Circle No. 434

Bias supply provides short-circuit protection

Dave Kim, Linear Technology Corp, Milpitas, CA

Most power-supply designs require protection from a short-circuit fault condition. One of the methods of short-circuit protection is cycling, or the "hiccup-mode" method. This method is an effective way of controlling a short-circuit fault condition while minimizing power loss in the circuit. **Figure 1** shows a trickle-charged bias supply that uses an LT1431 programmable reference, IC_1, to start an LT1680 high-power dc/dc step-up controller, IC_2, which operates here in a forward-converter topology. This circuit is useful for applications with wide input-voltage ranges, such as telecommunication applications with input ranges of 18 to 72V.

IC_2's undervoltage-lockout (UVLO) hysteresis, which you can adjust using the R_1/R_2 voltage divider at the RUN/SHDN pin, sets the short-circuit cycling. An overwinding, L_1, on L_2's output inductor provides a V_{CC} of 12V. When a short-circuit fault at the output drags V_{CC} down to IC_2's UVLO threshold, IC_2 shuts down, and a constant bias current starts to charge the bias supply capacitor. IC_1 controls the scaled current mirror that generates a constant current and continually adjusts itself to keep the input of the current mirror at 3 mA. When this constant current charges the bias capacitor to the level of IC_2's turn-on threshold (approximately 12V), IC_2 wakes up. You can calculate the turn-on delay using the following equation:

$$T_{TURN-ON\ DELAY} = \frac{C_{BIAS} \times V_{TURN-ON\ THRESHOLD}}{I_{CHARGE}}.$$

With a constant charging current of 3 mA, the turn-on delay for the circuit is

Figure 1

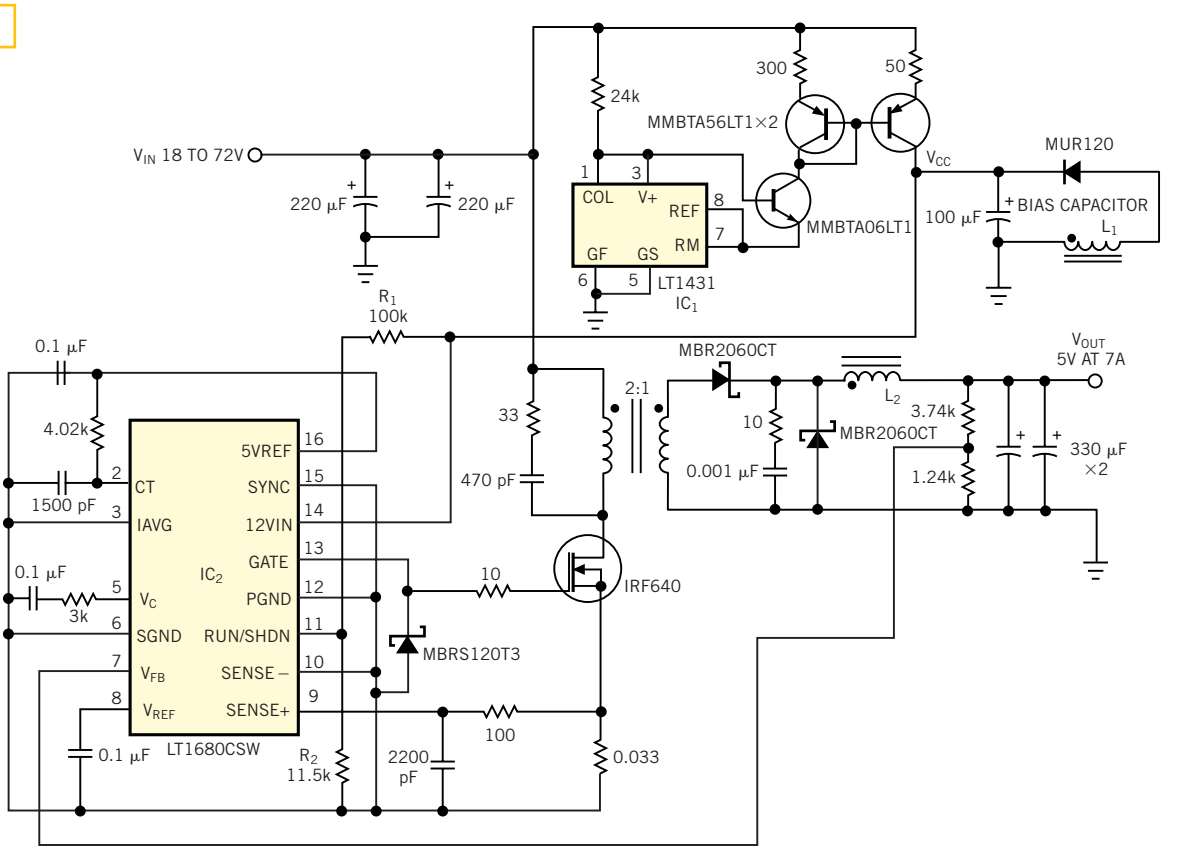

A programmable reference, IC_1, and a bias-capacitor network control the on/off cycling of IC_2's step-up controller during a short-circuit fault condition.

approximately 400 msec. You can produce shorter turn-on delays by reducing the value of the bias capacitor or increasing the bias current. If you increase the bias current, you must scale the transistors according to their power-dissipation ratings.

Figure 2a shows the bias-capacitor voltage and the output of the forward-converter voltage during turn-on. When the bias capacitor charges to the turn-on threshold voltage of 12V set by IC_2, the output turns on and the bias capacitor's voltage dips to 11.5V, which is the level that the overwinding sets. **Figure 2b** shows the bias capacitor and output voltage in cycling mode during a short-circuit fault. IC_1 sets the constant current, which charges the bias capacitor to the turn-on threshold, and IC_2 starts up. However, the overwinding generates no voltage because of the short at the output. And because IC_2's quiescent current is greater than the charge current, the bias capacitor discharges. Discharging the bias capacitor to less than the UVLO threshold shuts down IC_2. This charging and discharging cycle repeats until you remove the fault.

You can calculate the restart time using the following equation, where V_{RUN} equals the turn-on threshold set by RUN/SHDN:

$$T_{RESTART} = \frac{C_{BIAS} \times (V_{RUN} - V_{UVLO})}{I_{CHARGE}}.$$

When implementing a cycling type of short-circuit protection, a constraint is on the maximum capacitive load for which the power supply starts. The capacitive load depends on the short-circuit current and the threshold voltage at which the overwinding back-feeds the bias supply. The output rise time of the LT1680 must be less than the holdup time that the hysteresis and the bias capacitor provide.

You can calculate the start-up time using:

$$T_{OUTPUT\ RISE} = \frac{C_{OUT} \times V_{THRESHOLD}}{I_{SHORT} - I_{LOAD}},$$

where

$$V_{THRESHOLD} = \frac{V_{ULVO} \times V_{OUT}}{V_{CC}}.$$

You can calculate the hold-up time using:

$$T_{HOLDUP} = \frac{C_{BIAS} \times (V_{RUN} - V_{UVLO})}{I_{RUN}},$$

where I_{RUN} is the current necessary to start up IC_2. The start-up time must be less than the hold-up time for the power supply to start. (DI #2414)

Figure 2

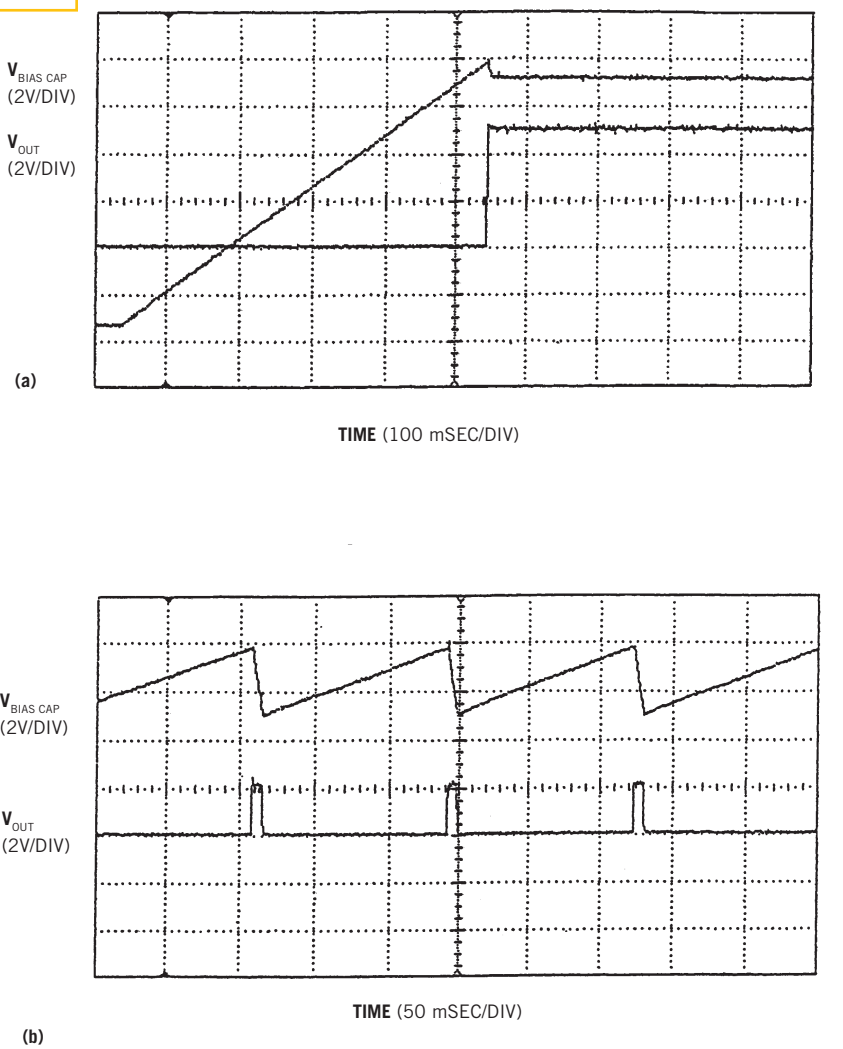

The output turns on when the bias capacitor reaches 12V (a). During a short-circuit fault, the bias capacitor continually charges and discharges until you remove the fault (b).

To Vote For This Design, Circle No. 435

Analog multiplier works over large frequency range

Hubert Houtman, Consultant, Blaine, WA

Schottky-diode double-balanced mixers are common elements in analog and digital telecommunications circuits that operate at radio and microwave frequencies. Transistor analog multipliers, such as log-antilog, MOS, and variable-transconductance types, are usually limited to frequencies of much less than 1 GHz. In the circuit in **Figure 1**, an MBD301 hot-carrier Schottky-diode bridge forms the core of a four-quadrant analog multiplier and, therefore, can operate over a much larger frequency range than can transistor analog multipliers. This highly sensitive double-balanced modulator provides a high-quality output with low spurious-response level. Using the proper high-frequency circuit and IC techniques, you can use this type of circuit for digital and analog communications, radar, product detection, AGC circuits, and phase detectors in the radio and microwave bands.

Like many double-balanced mixers and analog multipliers, this circuit has an amplifier, the MAX4223, for the IF. This differential amplifier is the only essential amplifier in the circuit; the MAX4224s are two 10-dB amplifier stages. If you use a balun transformer with a center-tap-grounded secondary in place of the dual AD8056, inputs A and B can be radio or microwave frequencies. With the input amplifiers shown, however, the frequency range for Input A is limited to about 100 MHz. You can use fast transistor amplifiers for the input and the output amplifiers to achieve system bandwidths greater than 1 GHz. You can also use a fast buffer amplifier—such as the MAX4405, which has a 75Ω output—at Input B for improved port isolation.

Figure 2

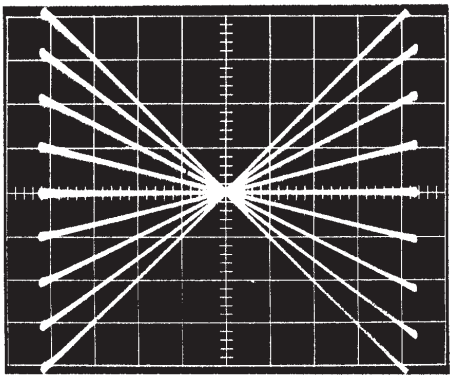

A quarter-squares multiplier test pattern on an X-Y oscilloscope illustrates good linearity and balanced behavior in all four quadrants. (Horizontal = Input A at 10 mV/div; vertical = V_{OUT} at 20 mV/div.)

Figure 1

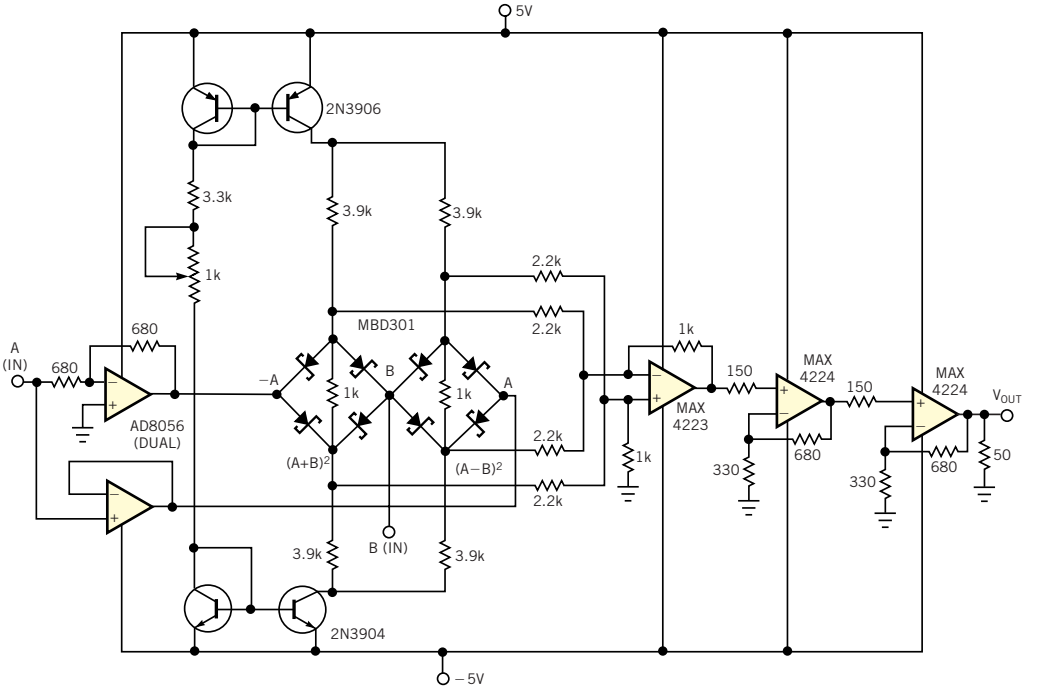

NOTE: ALTHOUGH NOT SHOWN, ALL OP AMPS HAVE MANUFACTURER-RECOMMENDED DECOUPLING CAPACITORS.

An MBD301 hot-carrier Schottky-diode bridge forms the core of a four-quadrant analog multiplier that performs continuous computations of the product of arbitrary input signals A and B.

This four-quadrant analog multiplier is a quarter-squares multiplier based on the identity:

$(A+B)^2-(A-B)^2=4AB.$

The MAX4223 differential amplifier, which has a 1-GHz bandwidth, registers $(A+B)^2$ from the left bridge while subtracting $(A-B)^2$ from the right bridge to form the product:

$V_{OUT}=AB/K,$

where the constant, K, is 12 mV. You can add the carrier at the differential amplifier's input for amplitude modulation as necessary.

The differential output across the 1-kΩ resistor of each diode bridge is a precisely symmetric, even function of the voltage across it: A+B for the left bridge and A−B for the right bridge. Consequently, the bridge's V_{OUT} contains only even terms of the combined Taylor series due to the four diode currents. The constant terms cancel out because the MAX4223 subtracts the bridge outputs, so the dominant term is the square term. Higher order even terms do not contribute, provided that inputs A and B stay at less than approximately 150 mV. For large inputs, each bridge behaves as a full-wave rectifier; the diodes become forward-biased with resistance smaller than the 1-kΩ load, and the parabolic branches ultimately degenerate into straight lines that the load resistor dominates. Therefore, the multiplier is unusable with such large inputs.

The circuit includes a balanced, double current-mirror network that supplies the diode bridge with four bias currents. A single 1-kΩ potentiometer controls the current, and four 3.9-kΩ resistors accurately distribute equal, balanced currents to the two bridges while preventing crosstalk between the bridges. These four resistors also isolate the diode bridges from the transistors, thereby improving system bandwidth.

Without this bias-current network, the bridge requires an approximately 5-MΩ load resistor for parabolic behavior. This value precludes this design's use in high-frequency circuits because the currents are extremely small and the time constants are very long when you connect the bridge to an amplifier input of a few picofarads. With the 1-kΩ load for the bridge and no bias network, the bridge output has a pronounced flat bottom around the origin. Fortunately, with the bias current of 1.08 mA in each 3.9-kΩ resistor, the Schottky diodes become forward-biased into partial conduction with 340 mV for each path, and the bridge yields an accurate and symmetric square-law output with a low source resistance.

You can use one such bridge with the differential amplifier as a fast squarer for frequency-doubling and square-law detection, for example. With slightly more current, you can make the load resistor as little as 50Ω.

The multiplier test pattern in **Figure 2** results from a 5-kHz sine wave on both Input A and the horizontal input and a 20-kHz square wave from a 100Ω source set at 0-, 6-, 12-, 18-, and 24-mV amplitude levels at Input B. Over this range of inputs, this multiple exposure shows that the analog multiplier exhibits linear behavior with errors of less than 1% of full scale. In **Figure 3a**, Trace A shows a double-sideband, suppressed-carrier output resulting from a −28 dBm, 20-kHz square-wave carrier, and Trace B results from a 20-kHz sine-wave carrier. Trace C shows the 2-kHz modulation signal on Input A. **Figure 3b** shows double-sideband suppressed-carrier output signals at Input B frequencies of 10 MHz (Trace A), 25 MHz (Trace B), and 120 MHz (Trace C) using a 600-kHz sine-wave modulator at Input A . Trace D shows that same signal as Trace C but at 5 nsec/division, to show that the rise time of the multiplier in this breadboard version is just a few nanoseconds. (DI #2413)

Figure 3

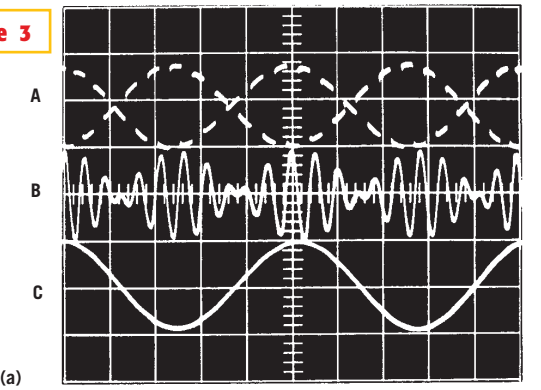

(a)

VERTICAL SCALE=50 mV/DIV
HORIZONTAL SCALE=100 mSEC/DIV

TRACE	DESCRIPTION
A	MULTIPLIER OUTPUT WITH A 12-mV, 20-kHz SQUARE-WAVE CARRIER AT INPUT B
B	MULTIPLIER OUTPUT WITH A 12-mV, 20-kHz SINE-WAVE CARRIER AT INPUT B
C	2-kHz SINE-WAVE-MODULATION SIGNAL AT INPUT A

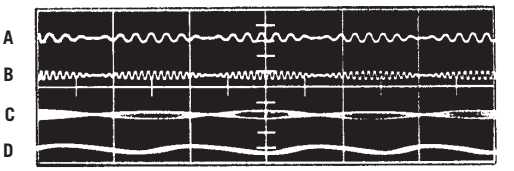

(b)

VERTICAL SCALE=10V/DIV

TRACE	HORIZONTAL SCALE	DESCRIPTION
A	500 NSEC/DIV	MULTIPLIER OUTPUT WITH A 10-MHz SIGNAL AT INPUT B
B	500 NSEC/DIV	MULTIPLIER OUTPUT WITH A 25-MHz SIGNAL AT INPUT B
C	500 NSEC/DIV	MULTIPLIER OUTPUT WITH A 120-MHz SIGNAL AT INPUT B
D	5 NSEC/DIV	TRACE C WITH AN EXPANDED TIME SCALE

NOTE:
INPUT A IS A 600-kHz SINE-WAVE-MODULATION SIGNAL.

Example multiplier outputs include a double-sideband suppressed-carrier with a 20-kHz square-wave carrier at Input B (a) and outputs with input frequencies as large as 120 MHz (b).

To Vote For This Design, Circle No. 436

5V logic pulser is battery-powered

W Stephen Woodward, University of North Carolina, Chapel Hill, NC

A battery-powered, pushbutton-triggered TTL/CMOS-compatible source of debounced 5V logic pulses is a simple but handy piece of test equipment to have in any tool kit (**Figure 1**). The circuit's battery-powered operation complicates what would otherwise be a trivial exercise in switch-bounce and timing-circuit design. The convenient use of battery power simultaneously imposes two requirements: near-zero quiescent-current draw and input-variation-tolerant voltage regulation. A near-zero quiescent-current draw minimizes the likelihood that you will encounter a dead battery when you need to use the logic pulser, and input-variation-tolerant voltage regulation accommodates the inevitable voltage droop as the battery ages and traverses its service-life curve from fresh to flat.

Of course, the unglamorous on/off switch is a traditional and serviceable way to fulfill the first requirement. Unfortunately, the effectiveness of an on/off switch depends directly, and regrettably, on whether you remember to use it. Neglecting proper and timely operation of on/off switches may result in battery damage. Thus, a key feature of the logic pulser in **Figure 1** is a satisfactory battery life without dependence upon a separate, manual on/off switch.

The trick to this design feature is the use of a single NO spst momentary-contact pushbutton switch to control both the trigger logic and the voltage regulator. In the quiescent state, S_1 is open, which leaves the ground-reference pin of the 78L05 regulator floating and causes the regulator's output voltage to saturate about 1V less than the input voltage from the battery. The circuit applies the resulting 7 to 8V to the V_{DD} pin of the 74C04 and, via R_5, to the debounce timeout circuit comprising R_6, R_1, and C_1.

In this state, the 74C04 typically consumes less than 1 µA and is the only power demand on the battery. The regulator is floating and consumes no power, despite its normally multimilliamp quiescent current. This low power implies a battery-life expectancy that is limited only by the self-discharge characteristics, or shelf life, of the battery. This expectancy is typically 10 years for alkaline and much longer for lithium. Meanwhile, the fact that the circuit applies V_{DD} to the output gates of IC_{1B} and IC_{1C} while the steady state of timing circuit R_2, R_3, R_4, and C_2 applies a logic 1 to the inputs of these gates ensures a solid low-impedance logic low at the pulser's output.

When you push the trigger button, the sequence of events begins with the grounding of the regulator's reference pin and the consequent regulation—independent of battery voltage—of the 74C04's V_{DD} to 5V. Simultaneously, grounding one end of R_6 starts the discharge of C_2. The resulting approximate 20-msec delay provides adequate time for reliable debounce of the pushbutton, thus preventing the possibility of spurious multiple pulses in response to a single button press.

When IC_{1E}'s input ramps to the approximate 2.5V CMOS logic threshold, the positive feedback around the IC_{1E}-IC_{1D} pair via C_1 causes the circuit to present a clean logic transition to the C_2/R_3 differentiator. The R_2, R_3, and C_2 network combines with the IC_{1F}-IC_{1A} regenerative pair to convert the resulting edge into a single, pristine, 100-µsec pulse. The parallel IC_{1B}-IC_{1C} pair then inverts and buffers this pulse to the output. Following the pulse, the circuit output returns to a stable 0V level; the output remains low until you release the pushbutton, which readies the trigger circuit for another cycle. (DI #2412)

To Vote For This Design, Circle No. 437

Figure 1

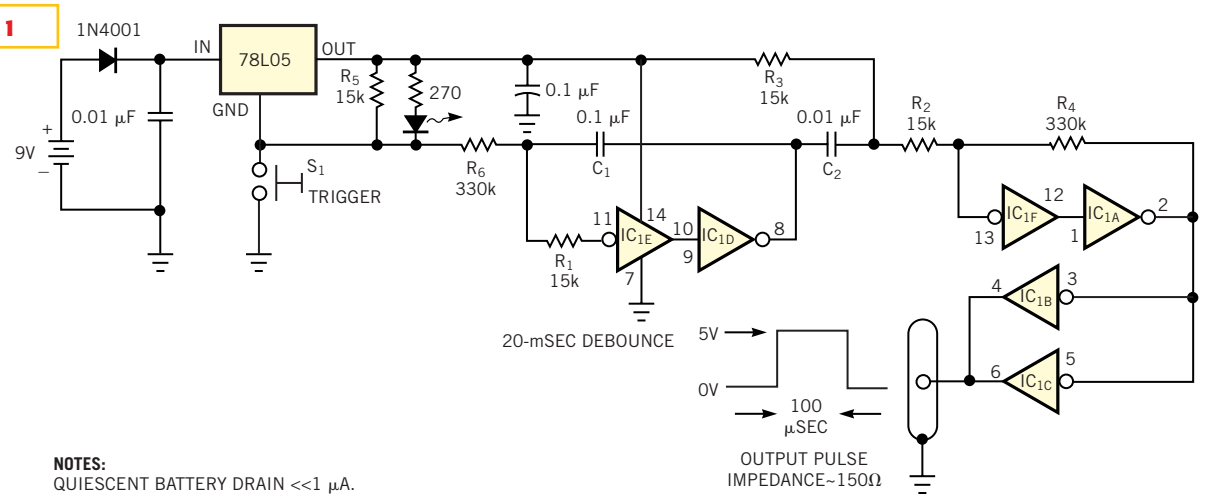

NOTES:
QUIESCENT BATTERY DRAIN <<1 µA.
NO POWER SWITCH NECESSARY.
IC_{1A} TO IC_{1F}=1/6 74C04 OR CD4069B.

This battery-powered debounced pulse generator conserves battery life without using an on/off power switch.

Design Idea Entry Blank

Entry blank must accompany all entries. $100 Cash Award for all published Design Ideas. An additional $100 Cash Award for the winning design of each issue, determined by vote of readers. Additional $1500 Cash Award for annual Grand Prize Design, selected among biweekly winners by vote of editors.

To: Design Ideas Editor, EDN Magazine
275 Washington St, Newton, MA 02158

I hereby submit my Design Ideas entry.

Name _____

Title _____

Phone _____

E-mail _____ **Fax** _____

Company _____

_____

Address _____

_____

Country _____ **ZIP** _____

Design Idea Title _____

_____

Social Security Number _____
(US authors only)

Entry blank must accompany all entries. (A separate entry blank for each author must accompany every entry.) Design entered must be submitted exclusively to *EDN*, must not be patented, and must have no patent pending. Design must be original with author(s), must not have been previously published (limited-distribution house organs excepted), and must have been constructed and tested. Fully annotate all circuit diagrams. Please submit software listings and all other computer-readable documentation on a IBM PC disk in plain ASCII.

Exclusive publishing rights remain with Cahners Publishing Co unless entry is returned to author, or editor gives written permission for publication elsewhere.

In submitting my entry, I agree to abide by the rules of the Design Ideas Program.

Signed _____

Date _____

Your vote determines this issue's winner. Vote now, by circling the appropriate number on the reader inquiry card.

Circle 12 or visit www.ednmag.com/infoaccess.asp

Circle 13 or visit www.ednmag.com/infoaccess.asp