Figure 1

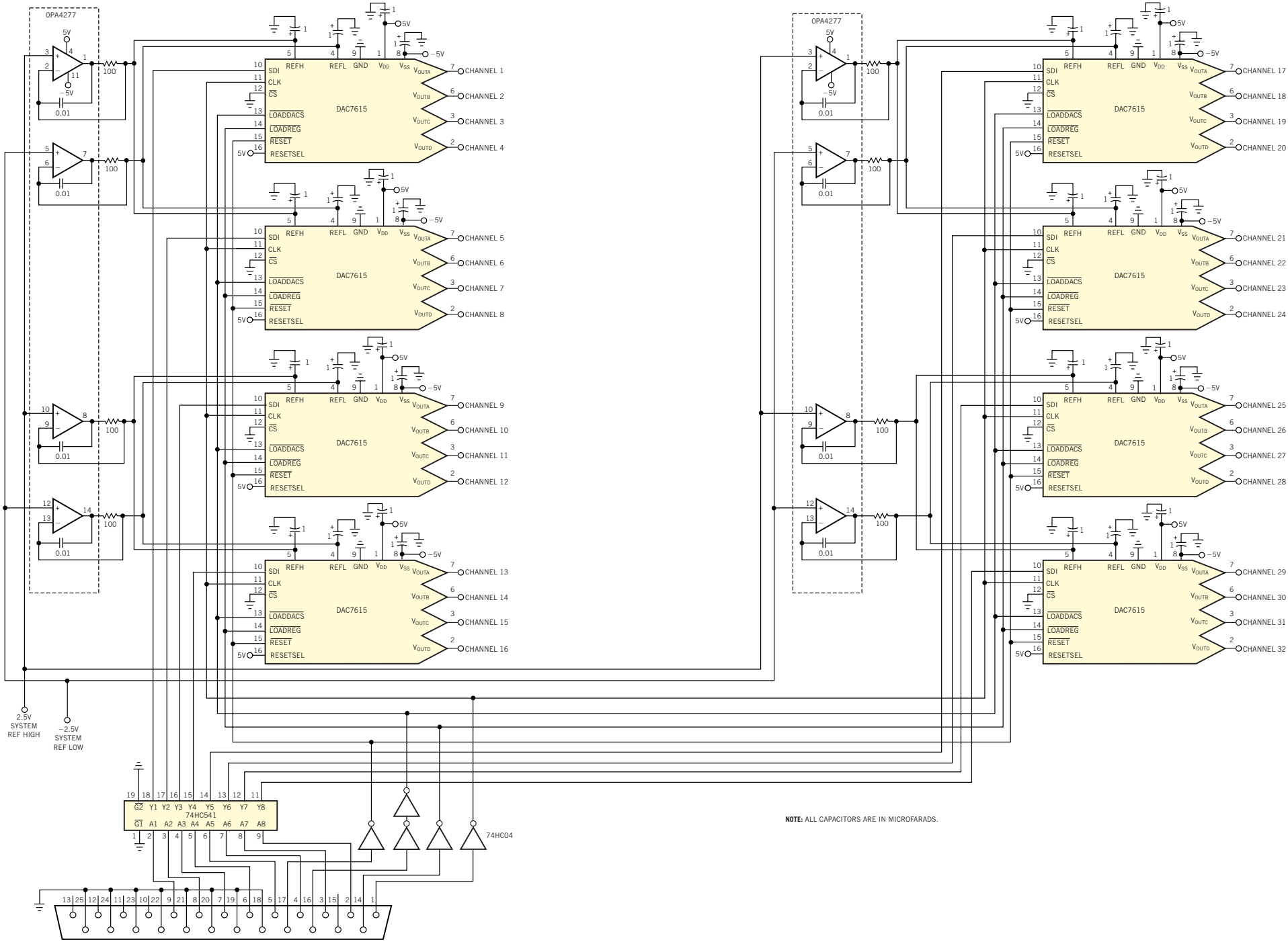

The controlling software transposes eight 16-bit words into a vector of 16 8-bit words.