**Figure 1**

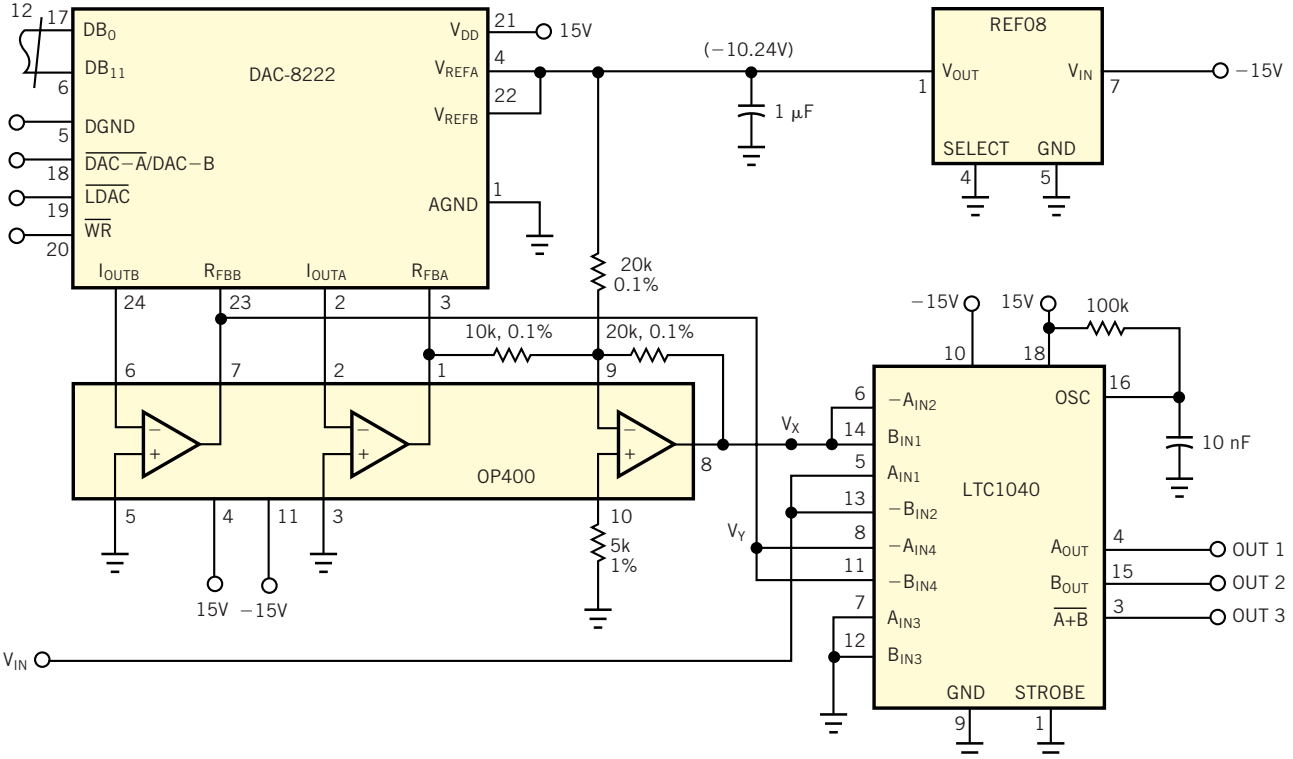


**A precision comparator uses a D/A converter to provide precise, noninteractive control of the upper and lower thresholds.**