Figure 1

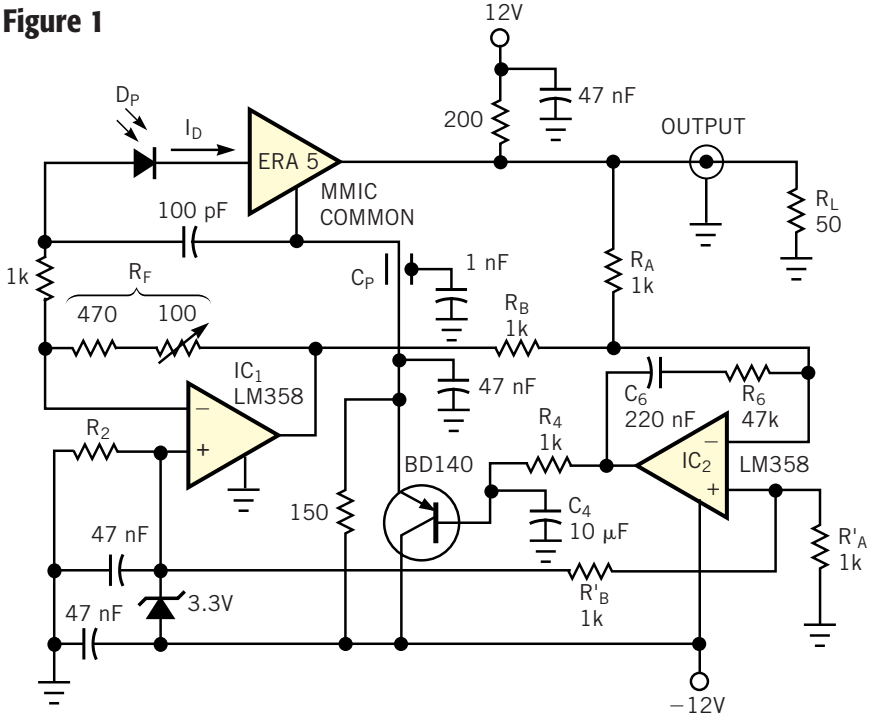

Feedforward compensation allows you to preserve the dc and low-frequency components of fiber-optic transmissions.