Figure 1

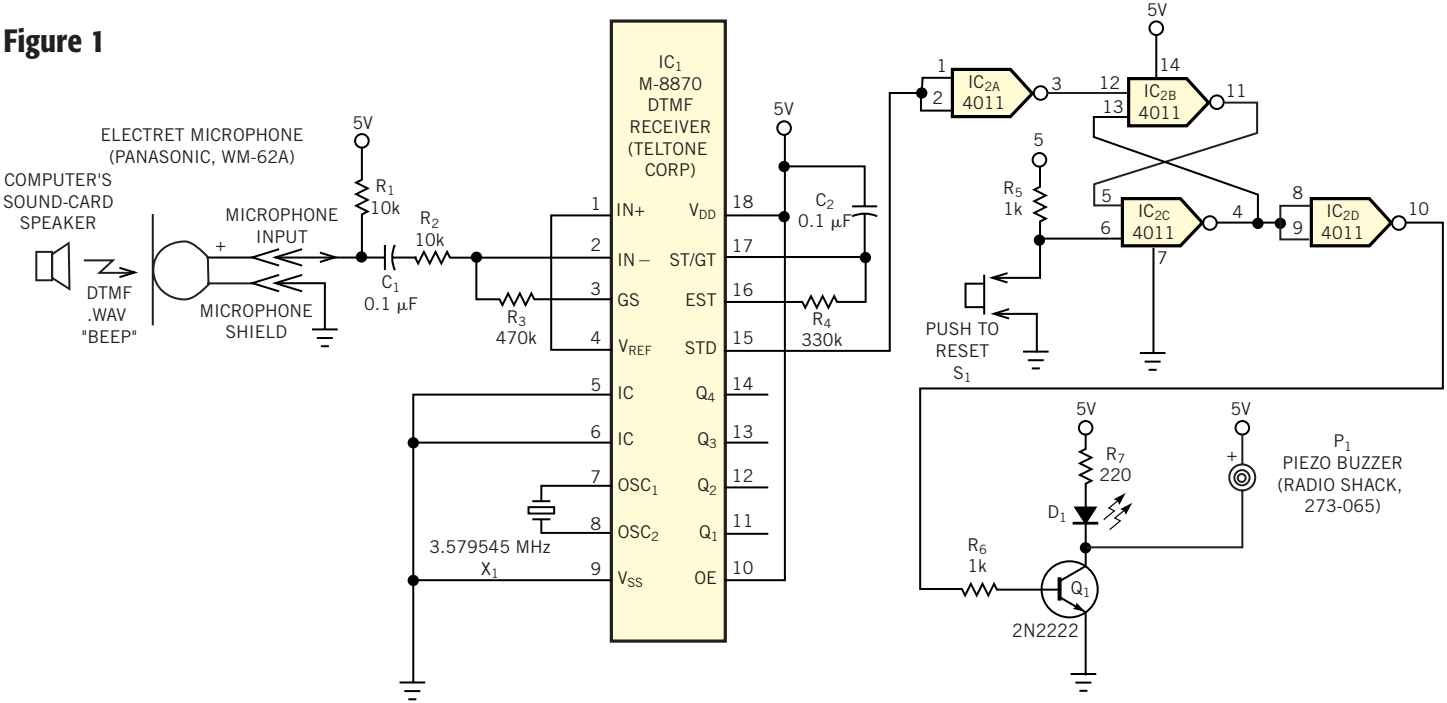

Tired of missing incoming e-mail? This circuit provides a permanent indication of incoming messages.